CERN/MPS-SI/Int. DL/70/4
23 April, 1970

# A SELECTION OF FORMULAE AND DATA USEFUL FOR THE DESIGN OF A.G. SYNCHROTRONS

C. Bovet, R. Gouiran, I. Gumowski, K.H. Reich

CERN LIBRARIES, GENEVA

CM-P00047617

European Organization for Nuclear Research
G E N E V A
Switzerland

CERN/MPS-SI/Int. DL/70/4
23 April, 1970

# A SELECTION OF FORMULAE AND DATA USEFUL FOR THE DESIGN OF A.G. SYNCHROTRONS

C. Bovet, R. Gouiran, I. Gumowski, K.H. Reich

European Organization for Nuclear Research
G E N E V A
Switzerland

CONTENTS

Page

List of frequently occuring symbols, their meanings and units 1

I. BASIC RELATIONS

1. Particle velocity, momentum and energy

1.1 Relations between $\beta$, cp, $E_0$, T, E, $\gamma$ 4

1.2 First derivatives 5

1.3 Logarithmic first derivatives 5

2. Energy available in collision between two particles

2.1 General two-body collision along the same line 6

2.2 Two identical particles 6

3. Magnetic and electric deflection

3.1 Magnetic deflection 7

3.2 Electric deflection 7

3.3 Comparison of electric and magnetic deflection 8

4. Some formulae for quantities related to synchrotrons

4.1 Mean machine radius 8

4.2 Relations between p, R, B, f, $\beta$ and their derivatives 8

4.3 Relation between currents and number of particles 9

II. TRANSVERSE PHASE SPACE

1. Matrix formulation of beam dynamics

1.1 General form of matrices with dispersive terms 12

1.2 Drift length $\ell$ 12

1.3 Dipole magnet 12

1.4 Gradient sector magnet 14

2. Description of single particle motion in a synchrotron

2.1 Equation of motion 15

2.2 Solution of the equation of motion 15

2.3 Sinusoidal approximation 15

2.4 Motion through one period (cell) of length $L_p$ 16

2.5 Transfer matrix through any section 16

2.6 Normalization 17

3. Ellipse representation in transverse phase space

3.1 The Courant-Snyder invariant 17

3.2 Ellipse parameters 17

3.3 Conversion of ellipse parameters 18

3.4 Geometrical properties of the ellipse 19

3.5 Relations between areas of rectangles, ellipses and circles 21

4. Closed orbit

4.1 Closed orbit for a momentum deviation $\Delta p/p$ 22

4.2 Orbit deformations 22

5. Effects of various focusing perturbations on the frequency and amplitude of betatron oscillations

5.1 Change in frequency due to tuning of quadrupole lenses or gradient errors 25

5.2 Tuning of momentum dependent frequency shifts by means of sextupoles 25

5.3 "Beating" of amplitudes 25

5.4 Stopbands due to random gradient errors 26

6. Space charge limit 26

III. LONGITUDINAL PHASE SPACE

1. Accelerating voltage 30

2. Accelerating frequency 30

3. Synchrotron oscillations

3.1 Equation of motion 31

3.2 Bucket size 31

3.3 Frequency of synchrotron oscillations 33

3.4 Adiabatic damping of small-amplitude oscillations 33

4. Debunching

4.1 Debunching time 34

4.2 Travelling distance required for debunching 35

IV. ROUGH EVALUATION OF MAJOR ACCELERATOR SYSTEMS

1. Magnets

1.1 Bending magnet 38

1.2 Quadrupole lens 38

1.3 Bending magnet and quadrupole lens excited in series 39

1.4 Cooling water requirements 39

2. Ferrite-loaded RF accelerating cavity
2.1 Basic quantities 40
2.2 Length of cavity 40
2.3 Equivalent resonant circuit 41
2.4 Longitudinal variation of power loss 41

3. Vacuum pressure required 42

References 43

Appendix A : Table of constants 45

Appendix B : Gaussian distributions 46

Appendix C : Proton kinematical table 47

Appendix D : Tables of RF "bucket" sizes 49

## LIST OF FREQUENTLY OCCURING SYMBOLS, THEIR MEANINGS AND UNITS *)

| | |
|---|---|
| $A$ | RF "bucket" area (in longitudinal phase plane **) [see page 31] |
| $A_H$ | acceptance in horizontal phase plane** [see page 18] (= area of largest acceptable ellipse/$\pi$) |
| $A_V$ | acceptance in vertical phase plane** [see page 18] |
| $B, B_0$ | magnetic flux density, in teslas [T], nominal value |
| $C, C_0$ | length of orbit [m], nominal value |
| $c$ | velocity of light [m/s] |
| $e$ | electronic charge [C] |
| $eV$ | maximum energy gain per turn [keV] (unless units stated otherwise) |
| $E$ | total energy of particle [GeV] (unless units stated otherwise) |
| $E_0$ | rest energy of particle [GeV] (unless units stated otherwise) |
| $f_a$ | accelerating frequency [Hz] |
| $f$ | revolution frequency [Hz] |
| $f_\infty$ | asymptotic value of $f_a$ reached at $\beta = 1$ |
| $g$ | gradient of magnetic field, in teslas per metre [$Tm^{-1}$] |
| $h$ | harmonic number = $f_a/f$ |
| $K$ | focal constant [$m^{-2}$] |
| $m$ | mass of particle [$GeV/c^2$] |
| $m_p$ | mass of proton [$GeV/c^2$] |
| $n$ | field index = $(-\rho_0/B_0)(\partial B/\partial x)$ |
| $p, p_0$ | momentum of particle [GeV/c], nominal value |
| $Q$ | number of betatron oscillations per revolution |
| $R, R_0$ | mean orbit radius (= $C/2\pi$), nominal value, [m] unless stated otherwise |
| $T$ | kinetic energy of particle [GeV] |
| $V$ | peak accelerating voltage per turn [kV] |

*) In square brackets

**) With these definitions the available six-dimensional hypervolume is $A_6 = \pi^2 A_H A_V RA$ where A is in $(\Delta p/m_0 c) - \varphi$ coordinates.

| | |
|---|---|
| $\alpha_p$ | momentum compaction factor |
| $\alpha(s)$ | Twiss parameter |
| $\beta$ | ratio of particle velocity to that of light (= v/c) |
| $\beta(s)$, $\beta_{H,V}$ | betatron amplitude function |
| $\Gamma$ | = sin $\varphi_s$ where $\varphi_s$ refers to the synchronous particle |
| $\gamma(s)$ | Twiss parameter |
| $\vartheta$ | deflection angle |
| $\epsilon$ | emittance in transverse plane [see page 18] (= area of ellipse/$\pi$ occupied by beam in respective plane) |
| $\epsilon_H$ | horizontal beam emittance* [see page 18] |
| $\epsilon_V$ | vertical beam emittance* [see page 18] |
| $\Theta$ | azimuthal angle |
| $\mu$ | phase shift of betatron oscillation for one focusing period |
| $\rho$ | bending radius [m], positive from centre towards outside |
| $\varphi$ | "phase angle" between particle and zero crossing of RF voltage |
| $\varphi_s$ | "phase angle" for synchronous (phase stationary) particle |
| $\psi(s)$ | phase advance of the betatron oscillation |

Other symbols are defined as they occur.

Coordinate system of particle: (Definitions of s, x, y, z as in Courant and Snyder[1.3**])

| | |
|---|---|
| s | distance along beam axis |
| x | horizontal transverse coordinate, same sign as $\rho$ |
| z | vertical transverse coordinate, positive towards sky |
| y | general transverse coordinate |
| $\bar{x}$ | arithmetic mean of x |
| $\langle x \rangle$ | r.m.s. value of x |

A prime denotes differentiation with respect to s.

A dot denotes differentiation with respect to time.

---

*) With these definitions the six-dimensional invariant hypervolume occupied by the beam is $V_6 = (\pi \beta \gamma)^2 \epsilon_H \epsilon_V R S_\varphi$ where $S_\varphi$ is the area [in $(\Delta p/m_0 c) - \varphi$ coordinates] occupied by one bunch in the longitudinal phase plane

**) See page 43 for references

# P A R T I

## BASIC RELATIONS

# 1. PARTICLE VELOCITY, MOMENTUM AND ENERGY

## 1.1 Relations between $\beta$, cp, $E_0$, T, E, $\gamma$

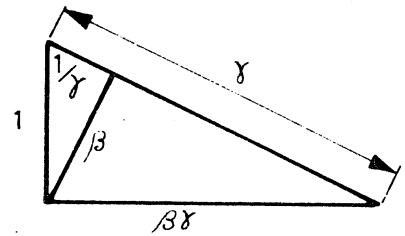


| In terms of / Wanted | $\beta$ | cp | T | E | $\gamma$ |
|---|---|---|---|---|---|
| $\beta$ = | $\beta$ | $[(E_0/cp)^2 + 1]^{-1/2}$ <br> $cp/E$ | $[1 - (1 + T/E_0)^{-2}]^{1/2}$ | $[1 - (E_0/E)^2]^{1/2}$ <br> $cp/E$ | $(1 - \gamma^{-2})^{1/2}$ |
| cp = | $E_0(\beta^{-2} - 1)^{-1/2}$ <br> $E\beta$ | cp | $[T(2E_0 + T)]^{1/2}$ <br> $T[(\gamma + 1)/(\gamma - 1)]^{1/2}$ | $(E^2 - E_0^2)^{1/2}$ <br> $E\beta$ | $E_0(\gamma^2 - 1)^{1/2}$ |
| $E_0$ = | $cp/\beta\gamma$ <br> $E(1 - \beta^2)^{1/2}$ | $cp(\gamma^2 - 1)^{-1/2}$ | $T/(\gamma - 1)$ | $(E^2 - c^2p^2)^{1/2}$ | $E/\gamma$ |
| T = | $[(1 - \beta^2)^{-1/2} - 1]E_0$ | $[E_0^2 + c^2p^2]^{1/2} - E_0$ <br> $cp[(\gamma - 1)/(\gamma + 1)]^{1/2}$ | T | $E - E_0$ | $E_0(\gamma - 1)$ |
| $\gamma$ = | $(1 - \beta^2)^{-1/2}$ | $cp/E_0\beta$ <br> $[1 + (cp/E_0)^2]^{1/2}$ | $1 + T/E_0$ | $E/E_0$ | $\gamma$ |

In a synchrotron:

$\beta = 2\pi Rf/c \qquad (f = f_a/h)$

and $p[\mathrm{GeV/c}] = 0.2997925\ B\rho\ [\mathrm{Tm}]$ , or $p\ [\mathrm{VAs^2m^{-1}}] = eB\rho\ [\mathrm{As\ Tm}]$ .

## 1.2 First Derivatives

| In terms of / Wanted | $d\beta$ | $d(cp)$ | $d\gamma = dE/E_0 = dT/E_0$ |
|---|---|---|---|
| $d\beta =$ | $d\beta$ | $[1 + (cp/E_0)^2]^{-3/2}\, d(cp)/E_0$ | $\gamma^{-2}(\gamma^2 - 1)^{-1/2}\, d\gamma$ |
| | | $\gamma^{-3}\, d(cp)/E_0$ | $\beta^{-1}\, \gamma^{-3}\, d\gamma$ |
| $d(cp) =$ | $E_0(1 - \beta^2)^{-3/2}\, d\beta$ | $d(cp)$ | $E_0\gamma(\gamma^2 - 1)^{-1/2}\, d\gamma$ |
| | $E_0\, \gamma^3\, d\beta$ | | $E_0\, \beta^{-1}\, d\gamma$ |
| $d\gamma =$ $= dE/E_0 =$ $= dT/E_0 =$ | $\beta(1 - \beta^2)^{-3/2}\, d\beta$ | $[1 + (E_0/cp)^2]^{-1/2}\, d(cp)/E_0$ | $d\gamma$ |
| | $\beta\gamma^3\, d\beta$ | $\beta\, d(cp)/E_0$ | |

## 1.3 Logarithmic first derivatives

| In terms of / Wanted | $d\beta/\beta$ | $dp/p$ | $dT/T$ | $dE/E = d\gamma/\gamma$ |
|---|---|---|---|---|
| $d\beta/\beta =$ | $d\beta/\beta$ | $\gamma^{-2}\, dp/p$ | $[\gamma(\gamma + 1)]^{-1}\, dT/T$ | $(\gamma^2 - 1)^{-1}\, d\gamma/\gamma$ |
| | | $dp/p - d\gamma/\gamma$ | | $(\beta\gamma)^{-2}\, d\gamma/\gamma$ |
| $dp/p =$ | $\gamma^2 d\beta/\beta$ | $dp/p$ | $[\gamma/(\gamma + 1)]\, dT/T$ | $\beta^{-2}\, d\gamma/\gamma$ |
| $dT/T =$ | $\gamma(\gamma + 1)\, d\beta/\beta$ | $(1 + \gamma^{-1})\, dp/p$ | $dT/T$ | $\gamma(\gamma - 1)^{-1}\, d\gamma/\gamma$ |
| $dE/E =$ | $(\beta\gamma)^2\, d\beta/\beta$ | $\beta^2\, dp/p$ | $(1 - \gamma^{-1})\, dT/T$ | $d\gamma/\gamma$ |
| $d\gamma/\gamma =$ | $(\gamma^2 - 1)\, d\beta/\beta$ | $dp/p - d\beta/\beta$ | | |

---

See page 1 for meaning of symbols.

## 2. ENERGY AVAILABLE IN COLLISION BETWEEN TWO PARTICLES

$\beta$, $\gamma$, and $\Theta_c$ measured in the laboratory frame.

### 2.1 General two-body collision along the same line

$$E_{c.m.} = [m_1^2 + m_2^2 + 2m_1m_2\gamma_1\gamma_2\ (1 - \beta_1\beta_2)]^{1/2} \quad ,$$

where $\beta$ is counted algebraically, and $E_{c.m.}$ is the total energy in the centre-of-mass frame, i.e. the maximum available energy.

### 2.2 Two identical particles

i) One particle at rest: $\beta_1 = 0$, $\gamma_1 = 1$

$$E_{c.m.} = m\ (2 + 2\gamma_2)^{1/2} \approx m\ (2\gamma_2)^{1/2} \qquad \text{for } \gamma_2 >> 1 \ .$$

ii) Two particles having velocities of the same magnitude but of opposite sign: $\gamma_1 = \gamma_2 = \gamma$ ; $\beta_1 = -\beta_2$:

$$E_{c.m.} = 2E = 2m\gamma \ .$$

If a proton colliding with another proton at rest can liberate the same energy as a collision between two protons with opposite velocities, its energy is defined by

$$\gamma_{eq} = 2\gamma^2 - 1 \approx 2\gamma^2 \qquad \text{for } \gamma >> 1 \ .$$

iii) Two particles having velocities of the same magnitude but making a small angle $\Theta_c$:

$$E_{c.m.} = 2E\ (1 - \beta^2 \sin^2 (\Theta_c/2)]^{1/2}$$
$$\approx 2E \cos (\Theta_c/2) \qquad \text{for } \beta \approx 1 \ .$$

$$\gamma_{eq} = 2\gamma^2 \cos^2 (\Theta_c/2) - 1$$
$$\approx 2\gamma^2 \cos^2 (\Theta_c/2) \qquad \text{for } \gamma >> 1 \ .$$

---

**See page 1 for meaning of symbols**

## 3. MAGNETIC AND ELECTRIC DEFLECTION

### 3.1 Magnetic deflection

a) Deflection angle $\vartheta$ [rad] = $BL_t/(B\rho)$ = $0.2997925\ BL_t/p$ [Tm/GeV/c)]

b) Beam rigidity (magnetic bending radius)

$$B\rho\ [\mathrm{Tm}] = 3.3356\ p\ [\mathrm{GeV/c}]$$
$$= 3.1297\ \beta\gamma \text{ for protons (refer to Table 1.1 for other expressions)}$$

c) Sagitta

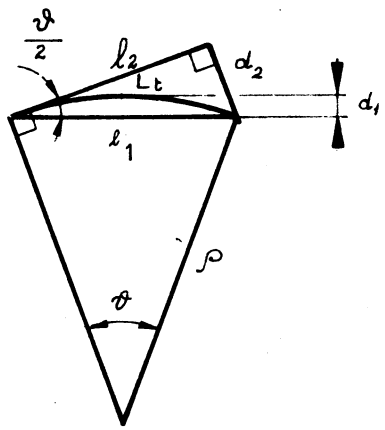


$$d_1 = \tfrac{1}{2}\,\ell_1 \tan(\vartheta/4) = 2\rho \sin^2(\vartheta/4)$$
$$\approx \frac{\rho\vartheta^2}{8} = \frac{L_t^2}{8\rho}$$

$$d_2 = \ell_2 \tan(\vartheta/2) = \rho(1 - \cos\vartheta)$$
$$\approx \frac{\rho\vartheta^2}{2} = \frac{L_t^2}{2\rho}$$

### 3.2 Electric deflection

a) Deflection angle

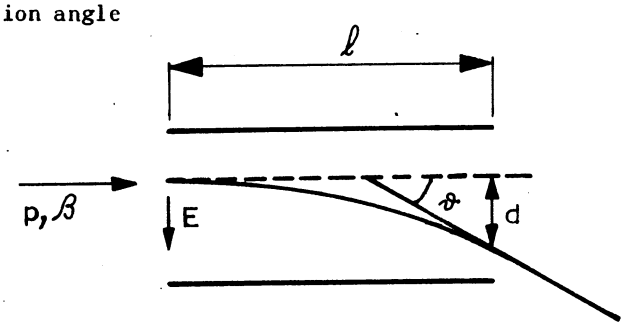


$$\vartheta\ [\mathrm{rad}] = \arctan(E\ell/p\beta)\ [10^9\ \mathrm{V/(GeV/c)}]$$

b) Sagitta

$$d[\mathrm{m}] = E\ell^2/2\beta p\ [10^9\ \mathrm{Vm/(GeV/c)}]\ .$$

### 3.3 Comparison of electric and magnetic deflection

For small $\vartheta$,

$$B[T] \approx E/(300\ \beta)\ [MV/m] \text{ for the same deflection.}$$

Equivalent deflection for high fields, B = 2T, E = 10 MV/m corresponds to $\beta = 1/60$; and, for protons, p = 16 MeV/c, T = 0.13 MeV.

## 4. SOME FORMULAE FOR QUANTITIES RELATED TO SYNCHROTRONS

### 4.1 Mean machine radius

$R_0 = C_0/2\pi = (1 + k)\rho_0$, where k is the circumference factor.

### 4.2 Relations between p, R, B, f, $\beta$ and their derivatives

#### 4.2.1 p, R, B*)

a) Fundamental equation

$$p = e\rho_0\ (R/R_0)^{1/\alpha_p}\ B$$

b) Definition of $\alpha_p$

$$\alpha_p = \frac{p}{R}\left(\frac{\partial R}{\partial p}\right)_B \quad \left(\approx \frac{1}{Q^2}\right)$$

#### 4.2.2 f, $\beta$, R

$$f = \beta c/2\pi R\ .$$

#### 4.2.3 Definition of transition energy $E_{tr} = \gamma_{tr} E_0$

$$\frac{p}{f}\left(\frac{\partial f}{\partial p}\right)_B = \frac{1}{\gamma_{tr}^2} - \alpha_p = 0$$

$$\gamma_{tr} = 1/\sqrt{\alpha_p}\ (\approx Q)\ .$$

---

*) B is defined on the nominal orbit $C_0$.

### 4.2.4 Differential relations

| Variables | Equations |
|---|---|
| B, p, R | $\frac{dp}{p} = \gamma_{tr}^2 \frac{dR}{R} + \frac{dB}{B}$ |
| f, p, R | $\frac{dp}{p} = \gamma^2 \frac{df}{f} + \gamma^2 \frac{dR}{R}$ |
| B, f, p | $\frac{dB}{B} = \gamma_{tr}^2 \frac{df}{f} + \frac{\gamma^2 - \gamma_{tr}^2}{\gamma^2} \frac{dp}{p}$ |
| B, f. R | $\frac{dB}{B} = \gamma^2 \frac{df}{f} + (\gamma^2 - \gamma_{tr}^2) \frac{dR}{R}$ |

## 4.3 Relation between currents and number of particles

a) Number of injected particles in terms of linac current:

In the case of multiturn injection

$$N = 1.5082 \times 10^{11}\ n_t \epsilon_a \epsilon_{tp} R I_L/\beta \quad [\mathrm{Am}]$$

where

$N$ is the number of trapped particles in the synchrotron;

$n_t$ is the number of injected turns;

$I_L$ is the linac current [A];

$\epsilon_a$ is the mean transverse phase space injection efficiency;

$\epsilon_{tp}$ is the longitudinal trapping efficiency.

b) Circulating current:

$$I\ [\mathrm{A}] = (ec/2\pi)(N\beta/R) = 7.6441 \times 10^{-12}\ N\beta/R\ [\mathrm{m}^{-1}]\ .$$

Number of charges passing per microsecond = $6.2418 \times 10^9 I$ [mA],

or I [mA] = $1.6021 \times 10^{-10}$ × number of charges passing per microsecond.

ADDITIONAL FORMULAE

# P A R T II

## TRANSVERSE PHASE SPACE

# 1. MATRIX FORMULATION OF BEAM DYNAMICS

## 1.1 General form of matrices with dispersive terms

The general matrix M is defined by

[2,52]*
[3,52]

$$\begin{pmatrix} y \\ y' \\ \Delta p/p \end{pmatrix}_B = M(B|A) \begin{pmatrix} y \\ y' \\ \Delta p/p \end{pmatrix}_A$$

## 1.2 Drift length $\ell$

$$M_\ell = \begin{pmatrix} 1 & \ell & 0 \\ 0 & 1 & 0 \\ 0 & 0 & 1 \end{pmatrix}$$

## 1.3 Dipole magnet

a) Notation and definitions

[3,154]

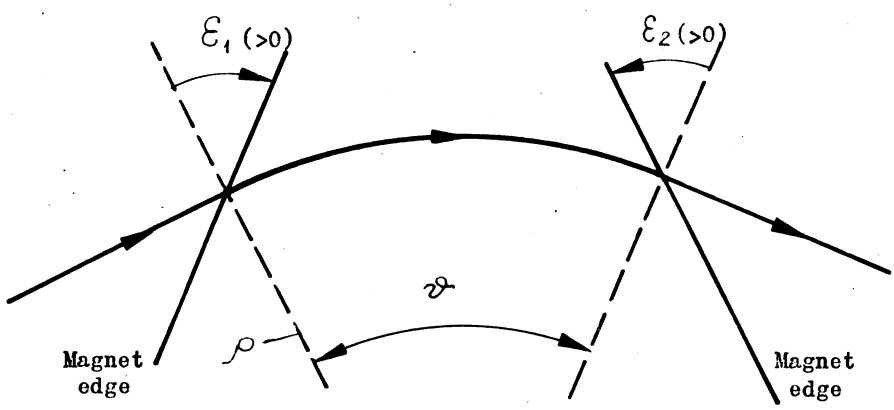


---

* See page 43 for references

Fringe field, linear approximation:

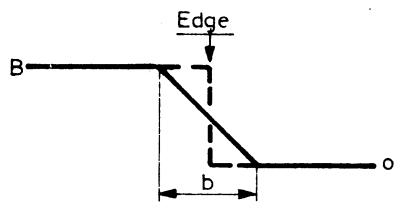


b) Pure sector magnet

($\epsilon_1 = \epsilon_2 = 0$, $b = 0$)

$$M_H^S = \begin{pmatrix} \cos\vartheta & \rho\sin\vartheta & \rho(1-\cos\vartheta) \\ -\frac{\sin\vartheta}{\rho} & \cos\vartheta & \sin\vartheta \\ 0 & 0 & 1 \end{pmatrix}$$ in horizontal plane (plane of deflection)

$$M_V^S = \begin{pmatrix} 1 & \rho\vartheta & 0 \\ 0 & 1 & 0 \\ 0 & 0 & 1 \end{pmatrix}$$ in vertical plane

c) Magnet with parallel faces

$$M_H^R = \begin{pmatrix} 1 & \rho\sin\phi \\ 0 & 1 \end{pmatrix} \qquad M_V^R = M_V^E\, M_V^S\, M_V^E$$

d) Edge effect with linear fringe field

[4,100]* $$M_H^E = \begin{pmatrix} 1 & 0 & 0 \\ \frac{\tan\epsilon}{\rho} & 1 & 0 \\ 0 & 0 & 1 \end{pmatrix}$$ $\epsilon = \epsilon_1$ for entrance

$\epsilon = \epsilon_2$ for exit

$$M_V^E = \begin{pmatrix} 1 & 0 & 0 \\ \frac{1}{\rho}\left(\frac{b}{6\rho\cos\epsilon} - \tan\epsilon\right) & 1 & 0 \\ 0 & 0 & 1 \end{pmatrix}$$ $\epsilon = \epsilon_1$ for entrance

$\epsilon = \epsilon_2$ for exit

---

*) See page 43 for references

## 1.4 Gradient sector magnet

a) Equation of profile

$$\left(\frac{\rho_0}{n} - x\right) z = \frac{\rho_0}{n} z_0$$

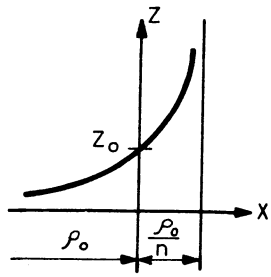


$z_0$ is the half-aperture where $\rho = \rho_0$.

Also $g[Tm^{-1}] = -nB_0/\rho_0$ $\quad [Tm^{-1}]$

$= -3.3356\ np_0/\rho_0^2$ $\quad [(GeV/c)m^{-2}]$ .

b) Focusing plane

[3,53]
$$M_F^* = \begin{pmatrix} \cos\zeta & \frac{1}{\sqrt{K}}\sin\zeta & \frac{1}{\rho K}(1-\cos\zeta) \\ -\sqrt{K}\sin\zeta & \cos\zeta & \frac{1}{\rho\sqrt{K}}\sin\zeta \\ 0 & 0 & 1 \end{pmatrix},$$

where $K[m^{-2}] = (|n| + 1)/\rho_0^2$ (horizontal plane)

$= |n|/\rho_0^2$ (vertical plane)

$\zeta = \ell_m \sqrt{K}$, $\ell_m$ is the magnetic length.

c) Defocusing plane

$$M_D^* = \begin{pmatrix} \cosh\zeta & \frac{1}{\sqrt{K}}\sinh\zeta & \frac{1}{\rho K}(\cosh\zeta - 1) \\ \sqrt{K}\sinh\zeta & \cosh\zeta & \frac{1}{\rho\sqrt{K}}\sinh\zeta \\ 0 & 0 & 1 \end{pmatrix},$$

where $K[m^{-2}] = (|n| - 1)/\rho_0^2$ (horizontal plane)

$= |n|/\rho_0^2$ (vertical plane)

$\zeta = \ell_m \sqrt{K}$, $\ell_m$ is the magnetic length

d) Pure quadrupole lens

The same matrices as in points (b) and (c) are used, with $1/\rho = 0$ and $K[m^{-2}] = 0.2997925\ g/p_0$ $\quad [Tm^{-1}/(GeV/c)]$

$= -n/\rho_0^2 = g/(B\rho)$ $\quad [m^{-2}]$

$= 0.31952\ g/\beta\gamma$ $\quad [Tm^{-1}]$ for protons.

---

*) Valid for coordinate system defined on page 2.

## 2. DESCRIPTION OF SINGLE PARTICLE MOTION IN A SYNCHROTRON

### 2.1 Equation of motion

[2,33] $$d^2x/ds^2 + K_x(s)x = (\Delta p/p)/\rho(s)$$

[5,55] $$d^2z/ds^2 + K_z(s)z = 0.$$

[1,3]

### 2.2 Solution of the equation of motion

[1,11] [2,79] [6,4]

$$\begin{cases} y(s) = \sqrt{\epsilon\beta(s)}\cos[\psi(s) + \delta] \\ y'(s) = -\sqrt{\epsilon/\beta(s)}\{\alpha(s)\cos[\psi(s)+\delta] + \sin[\psi(s)+\delta]\} = \sqrt{\epsilon\gamma(s)}\cos[\chi(s)+\delta] \end{cases}$$

$$\psi(s) = \int_0^s ds/\beta(s)$$

$$\beta(s)\gamma(s) = 1 + \alpha^2(s)$$

$$\beta'(s) = -2\alpha(s)$$

$$\tan[\psi(s) - \chi(s)] = 1/\alpha(s)$$

$$\sin[\psi(s) - \chi(s)] = -[\beta(s)\gamma(s)]^{-1/2}.$$

Envelope equation:

$$\sqrt{\beta}'' + K(s)\sqrt{\beta} - \beta^{-3/2} = 0$$

Initial conditions:

$$\epsilon = \gamma(o)y^2(o) + \beta(o)y'^2(o) + 2\alpha(o)y(o)y'(o)$$

$$\cos\delta = y(o)/\sqrt{\epsilon\beta(o)}$$

$$\tan\delta = -[\alpha(o) + \beta(o)y'(o)/y(o)].$$

For $y(o) = 0$ :

$$y(s) = y'(o)\sqrt{\beta(o)\beta(s)}\sin\psi(s)$$

$$y'(s) = -y'(o)\sqrt{\beta(o)/\beta(s)}[\alpha(s)\sin\psi(s) - \cos\psi(s)].$$

$$Q = \psi(C)/(2\pi)$$

Betatron wavelength $\lambda = 2\pi R/Q$

Form factor $F = \beta_{max}Q/R$ .

### 2.3 Sinusoidal approximation

$$\psi(s) \approx 2\pi s/\lambda = Q\,2\pi s/C \;; \quad \beta(s) \approx R/Q$$

$$y(s) \approx \sqrt{\epsilon\, R/Q}\,\cos(Qs/R + \delta).$$

## 2.4 Motion through one period (cell) of length $L_p$

$K(s)$, $\alpha(s)$, $\beta(s)$, $\gamma(s)$ are periodic with period $L_p$,

and $\psi(s + L_p) = \psi(s) + \mu$, $\chi(s + L_p) = \chi(s) + \mu$.

The transfer matrix through one period may be written as

[1,6]
$$\mathbf{M}(s + L_p | s) = \begin{pmatrix} a_{11} & a_{12} \\ a_{21} & a_{22} \end{pmatrix} = \begin{pmatrix} \cos\mu + \alpha(s)\sin\mu & \beta(s)\sin\mu \\ -\gamma(s)\sin\mu & \cos\mu - \alpha(s)\sin\mu \end{pmatrix}$$

$$\cos\mu = \tfrac{1}{2}(a_{11} + a_{22}) \qquad \beta(s) = a_{12}/\sin\mu$$
$$\gamma(s) = -a_{21}/\sin\mu \qquad \alpha(s) = \tfrac{1}{2}(a_{11} - a_{22})/\sin\mu .$$

## 2.5 Transfer matrix through any section

a) If the Twiss parameters at points $s_1$, $s_2$ are $(\beta_1, \alpha_1, \gamma_1)$ and $(\beta_2, \alpha_2, \gamma_2)$, respectively, the $2 \times 2$ transfer matrix from $s_1$ to $s_2$ can be written as

[1,9]
$$\mathbf{M}(s_2 | s_1) = \begin{pmatrix} m_{11} & m_{12} \\ m_{21} & m_{22} \end{pmatrix} =$$
$$= \begin{pmatrix} \sqrt{\frac{\beta_2}{\beta_1}}(\cos\Delta\psi + \alpha_1\sin\Delta\psi) & \sqrt{\beta_1\beta_2}\sin\Delta\psi \\ -\left[\frac{(1 + \alpha_1\alpha_2)\sin\Delta\psi + (\alpha_2 - \alpha_1)\cos\Delta\psi}{\sqrt{\beta_1\beta_2}}\right] & \sqrt{\frac{\beta_1}{\beta_2}}(\cos\Delta\psi - \alpha_2\sin\Delta\psi) \end{pmatrix},$$

where $\Delta\psi = \psi(s_2) - \psi(s_1)$.

b) Transformation of the Twiss parameters through a beam transfer section:

[7,100]
$$\begin{pmatrix} \beta_2 \\ \alpha_2 \\ \gamma_2 \end{pmatrix} = \begin{pmatrix} m_{11}^2 & -2m_{11}m_{12} & m_{12}^2 \\ -m_{21}m_{11} & 1 + 2m_{12}m_{21} & -m_{12}m_{22} \\ m_{21}^2 & -2m_{22}m_{21} & m_{22}^2 \end{pmatrix} \begin{pmatrix} \beta_1 \\ \alpha_1 \\ \gamma_1 \end{pmatrix} .$$

$$\tan\Delta\psi = m_{12}/[m_{11}\beta(s_1) - m_{12}\alpha(s_1)]$$

Example: drift length $\ell$,

[8,2]
$$\beta(s_2) = \beta(s_1) - 2\alpha(s_1)\ell + \gamma(s_1)\ell^2$$
$$\alpha(s_2) = \alpha(s_1) - \gamma(s_1)\ell$$
$$\gamma(s_2) = \gamma(s_1),$$

and $\psi(s_2) = \psi(s_1) + \arctan\{\ell/[\beta(s_1) - \alpha(s_1)\ell]\}$.

## 2.6 Normalization

After a normalisation transformation $\binom{\eta}{\eta'} = \mathbf{M}\binom{y}{y'}$ (with $\eta' = d\eta/d\psi$), the transverse phase space trajectories have the form of circles on which a phase advance $\psi(s)$ produces simply a rotation by $\psi$. Possible transformations matrices:

$$\mathbf{M} = \begin{pmatrix} \frac{1}{\sqrt{\beta(s)}} & 0 \\ \frac{\alpha(s)}{\sqrt{\beta(s)}} & \sqrt{\beta(s)} \end{pmatrix} ; \text{ or, when } \alpha = 0, \ \mathbf{M} = \begin{pmatrix} 1 & 0 \\ 0 & \beta(s) \end{pmatrix}$$

# 3. ELLIPSE REPRESENTATION IN TRANSVERSE PHASE SPACE (see page 18 for units)

## 3.1 The Courant-Snyder invariant

$$\gamma(s)y^2 + 2\alpha(s)yy' + \beta(s)y'^2 = \epsilon = \frac{\text{area}}{\pi} .$$

The largest area contained in the synchrotron is given by the acceptance $A_{H,V} = r^2/\beta_{max}$, where r is the half-aperture of the vacuum chamber at $\beta_{max}$.

## 3.2 Ellipse parameters

An ellipse centred at the origin of the phase plane is determined by three independent parameters. Depending on the particular problem, one can choose one of the following sets:

i) Twiss parameters $\alpha$, $\beta$, $\gamma$ and $\epsilon$ giving the emittance (see Section 3.1). These parameters transform with the matrix given in Section 2.5 (b);

ii) the elements $c_i$ of a 2 × 2 matrix which transforms by multiplication with $M(s_2|s_1)$; $(c_3 y - c_1 y')^2 + (c_4 y - c_2 y')^2 = \epsilon^2$

iii) L, S, and $\epsilon$ where L is the ratio of the ellipse axes a/b at the waist, S is the distance of the waist along the beam (>0 if waist upstream).

The optical transformations from $s_1$ to $s_2$ are:

$$L(s_2) = \frac{L(s_1)}{[m_{21}\, L(s_1)]^2 + [m_{21}\, S(s_1) + m_{22}]^2}$$

$$S(s_2) = \frac{m_{11}m_{21}\, L^2(s_1) + [m_{11}\, S(s_1) + m_{12}][m_{21}\, S(s_1) + m_{22}]}{[m_{21}\, L(s_1)]^2 + [m_{21}\, S(s_1) + m_{22}]^2} .$$

Conversion from one set to the other is given in Table 3.3.

## 3.3 Conversion of ellipse parameters

| given / wanted | $\alpha, \beta, \gamma, \epsilon$ | $\begin{pmatrix} c_1 & c_2 \\ c_3 & c_4 \end{pmatrix}$ | $L, S, \epsilon$ |
|---|---|---|---|
| | $\beta\gamma - \alpha^2 = 1$ | $\epsilon = c_1c_4 - c_2c_3$ | |
| $\alpha$ | $\alpha$ | $-(c_1c_3 + c_2c_4)/\epsilon$ | $-S/L$ |
| $\beta$ | $\beta$ | $(c_1^2 + c_2^2)/\epsilon$ | $L + S^2/L$ |
| $\gamma$ | $\gamma$ | $(c_3^2 + c_4^2)/\epsilon$ | $1/L$ |
| $c_1$ | $\sqrt{\epsilon\beta}$ | $c_1$ | $\sqrt{L\epsilon}$ |
| $c_2$ | $0$ | $c_2$ | $S\sqrt{\epsilon/L}$ |
| $c_3$ | $-\alpha\sqrt{\epsilon/\beta}$ | $c_3$ | $0$ |
| $c_4$ | $\sqrt{\epsilon/\beta}$ | $c_4$ | $\sqrt{\epsilon/L}$ |
| $L$ | $1/\gamma$ | $\epsilon/(c_3^2 + c_4^2)$ | $L$ |
| $S$ | $-\alpha/\gamma$ | $(c_1c_3 + c_2c_4)/(c_3^2 + c_4^2)$ | $S$ |

Comments on units:

The equations of Sections 3.1 to 3.4 are valid for either of the two following sets of units:

i) All lengths in metres, all angles in radians, the emittances in rad m, L (= $y_1/y_3'$ ) in m/rad , S(=$y_3/y_3'$) in m/rad.

ii) All phase plane dimensions in mm and mrad, emittances in mrad mm, $\beta$ = [mm/mrad] if defined as $y_2/y_4'$ or $\beta$ = [m] if defined as reduced betatron wavelength(similarly $\gamma$ = [mm/mrad], or [$m^{-1}$], L = [mm/mrad], S = [mm/mrad] if defined as $y_3/y_3'$ or S = [m] if defined as distance from waist.

N.B.: the values of $\alpha$, $\beta$, $\gamma$, L and S do not depend on the choice between i) and ii).

## 3.4 Geometrical properties of the ellipse

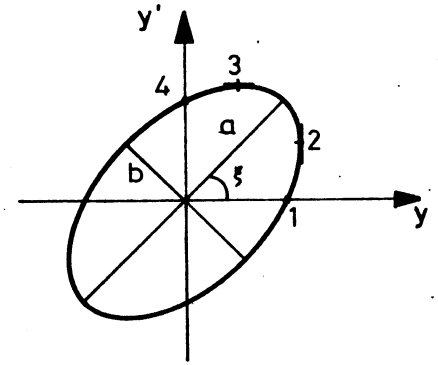


| | $\alpha,\ \beta,\ \gamma,\ \epsilon$ | $c_1 \quad c_2$ <br> $c_3 \quad c_4$ | $L,\ S,\ \epsilon$ |
|---|---|---|---|
| | $\beta\gamma - \alpha^2 = 1$ <br> $H = \frac{1}{2}(\beta + \gamma)$ | $\epsilon = c_1c_4 - c_2c_3$ <br> $H = \frac{1}{2}\,(c_1^2 + c_2^2 + c_3^2 + c_4^2)/\epsilon$ | $H = \frac{1}{2L}\,(L^2 + S^2 + 1)$ |
| $y_1$ | $\sqrt{\epsilon/\gamma}$ | $\epsilon/\sqrt{c_3^2 + c_4^2}$ | $\sqrt{\epsilon L}$ |
| $y_2$ | $\sqrt{\epsilon\beta}$ | $\sqrt{c_1^2 + c_2^2}$ | $\sqrt{\epsilon/L}\,\sqrt{S^2 + L^2}$ |
| $y_2'$ | $-\alpha\sqrt{\epsilon/\beta}$ | $(c_1c_3 + c_2c_4)/\sqrt{c_1^2 + c_2^2}$ | $S\sqrt{\epsilon/L}\Big/\sqrt{S^2 + L^2}$ |
| $y_3$ | $-\alpha\sqrt{\epsilon/\gamma}$ | $(c_1c_3 + c_2c_4)/\sqrt{c_3^2 + c_4^2}$ | $S\sqrt{\epsilon/L}$ |
| $y_3'$ | $\sqrt{\epsilon\gamma}$ | $\sqrt{c_3^2 + c_4^2}$ | $\sqrt{\epsilon/L}$ |
| $y_4'$ | $\sqrt{\epsilon/\beta}$ | $\epsilon/\sqrt{c_1^2 + c_2^2}$ | $\sqrt{\epsilon L}\Big/\sqrt{S^2 + L^2}$ |
| a | $\sqrt{\epsilon/2}\,(\sqrt{H + 1} + \sqrt{H - 1})$ | | |
| b | $\sqrt{2\epsilon}/(\sqrt{H + 1} + \sqrt{H - 1}) = \sqrt{\epsilon/2}\,(\sqrt{H + 1} - \sqrt{H - 1})$ | | |
| a/b > 1 | $H + \sqrt{H^2 - 1}$ | | |
| $\tan\xi$ | $[-\alpha(H + \sqrt{H^2 - 1})]/[\beta(H + \sqrt{H^2 - 1}) - 1]$ | $[c_2 + c_3(H + \sqrt{H^2 - 1})]/[c_1(H + \sqrt{H^2 - 1}) - c_4]$ | $S/[L(H + \sqrt{H^2 - 1}) - 1]$ |
| $\sin 2\xi$ | $-\alpha/\sqrt{H^2 - 1}$ | $(c_1c_3 + c_2c_4)/\epsilon\sqrt{H^2 - 1}$ | $S/L\sqrt{H^2 - 1}$ |
| $\cos 2\xi$ | $(\beta - \gamma)/2\sqrt{H^2 - 1}$ | $(c_1^2 + c_2^2 - c_3^2 - c_4^2)/2\epsilon\sqrt{H^2 - 1}$ | $(L^2 + S^2 - 1)/2L\sqrt{H^2 - 1}$ |
| $\tan 2\xi$ | $-2\alpha/(\beta - \gamma)$ | $2(c_1c_3 + c_2c_4)/(c_1^2 + c_2^2 - c_3^2 - c_4^2)$ | $2S/(L^2 + S^2 - 1)$ |

### 3.4.4 Two ellipses $S_1, S_2$ with same area S and centre

Common area $S_c$ is given by

$$\frac{S_c}{S} = \frac{4}{\pi} \text{ arc tan } [D - \sqrt{D^2 - 1}]^{1/2}$$

where $$D = \frac{1}{2} (\beta_2\gamma_1 + \gamma_2\beta_1 - 2\alpha_1\alpha_2)$$

$$= 1 + \frac{(L_2 - L_1)^2 + (S_2 - S_1)^2}{2L_1L_2} .$$

For meaning of $\alpha, \beta, \gamma, L, S$ see 3.2 .

### 3.4.5 Three ellipses

a) Area of ellipse $S_3$, similar to $S_2$, such that $S_3$ circumscribes $S_1$: (area $S_1$ = area $S_2$ = S)

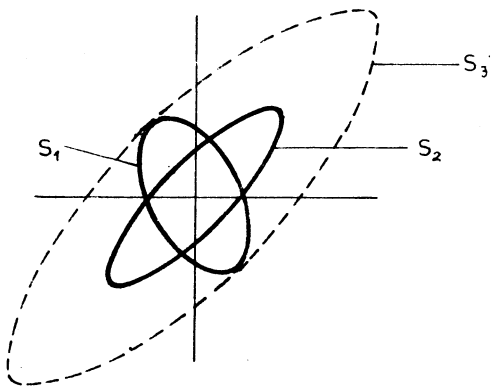


$$\frac{S_3}{S} = D + \sqrt{D^2 - 1}$$

See 3.4.4 for meaning of D

b) Area of ellipse $S_3$ circumscribing two ellipses $S_1, S_2$ of same area S:

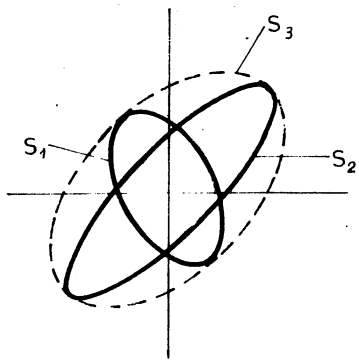


$$\frac{S_3}{S} = (D + \sqrt{D^2 - 1})^{1/2}$$

See 3.4.4 for meaning of D

## 3.5 Relations between areas of rectangles, ellipses and circles

### 3.5.1 Rectangle and ellipse

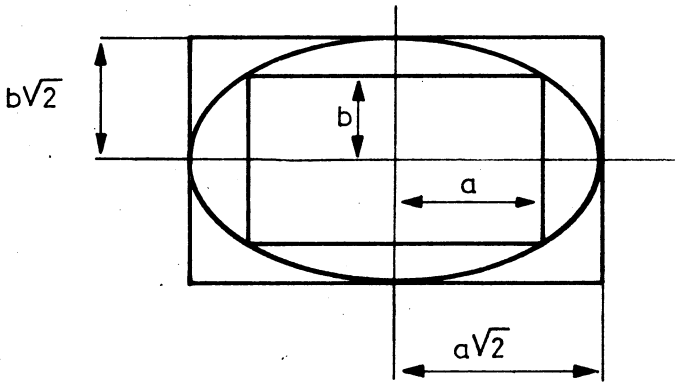


$$\frac{S_{\text{min ellipse}}}{S_{\text{inscribed rect.}}} = \frac{\pi}{2}$$

$$\frac{S_{\text{circumscribed rect.}}}{S_{\text{ellipse}}} = \frac{4}{\pi}$$

### 3.5.2 Semi-circle and ellipse

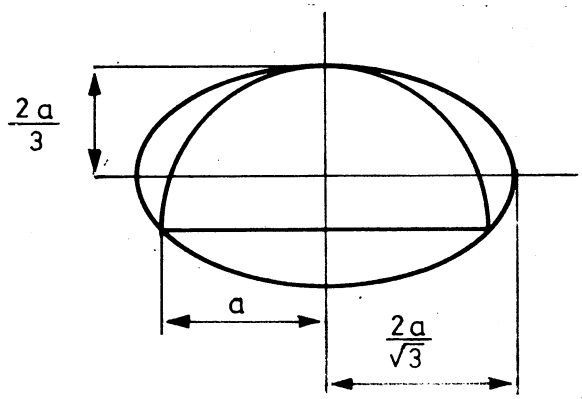


$$\frac{S_{\text{min ellipse}}}{S_{\text{semi-circle}}} = \frac{8\sqrt{3}}{9} \approx 1.54$$

### 3.5.3 Two maximum ellipses circumscribed by a circle

For a non-zero septum, see [9, Fig. 9]

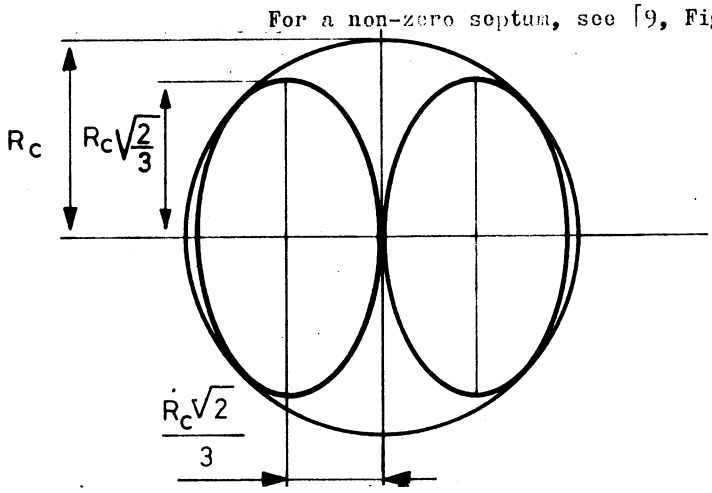


$$\frac{S_{\text{circle}}}{S_{\text{max ellipse}}} = \frac{3\sqrt{3}}{2} \approx 2.60$$

# 4. CLOSED ORBIT

## 4.1 Closed orbit for a momentum deviation $\Delta p/p$

The closed orbit for a given $\Delta p/p$ is given by its phase space coordinates:

[6,19]
$$\begin{pmatrix} e(s) \\ e'(s) \end{pmatrix} = \frac{\Delta p/p}{2(1-\cos\mu)} \begin{pmatrix} m_{13} + m_{12}m_{23} - m_{22}m_{13} \\ m_{23} + m_{21}m_{13} - m_{11}m_{23} \end{pmatrix} ,$$

the $m_{ij}$ being the elements of the $3\times 3$ transfer matrix through one period.

The transformation of the closed orbit vector through the machine is as in Section II.1.1., page 12.

## 4.2 Orbit deformations *)

### 4.2.1 One and two dipoles

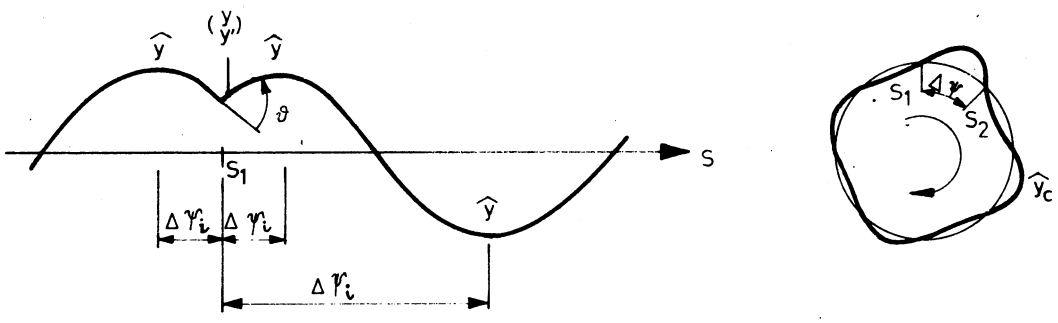


a) One dipole producing a deflection angle $\vartheta$

$$y(s_1) = 0.5\beta(s_1)\vartheta(s_1)\cot(\pi Q)$$

$$y'(s_1) = 0.5\vartheta(s_1)[1-\alpha(s_1)\cot(\pi Q)] .$$

The maximum orbit deviations are

$$\hat{y}(s) = 0.5\vartheta(s_1)[\beta(s_1)\beta(s)]^{1/2}/\sin(\pi Q)$$

and occur approximately at distances (in betatron oscillation phase) of

$$\Delta\psi_i \approx \pm\pi(Q-m) , \quad m = 1, 2, 3, \ldots < Q .$$

---

*) Complete decoupling between betatron and synchrotron oscillations, i.e. $\nu_{\text{betatron}} \gg \nu_{\text{synchrotron}}$, is assumed throughout.

b) Reduction of the deformation by a second dipole

For best reduction between $s_2$ and $s_1$ of a deformation described in a), a second dipole positioned at $s_2$ and spaced by $\Delta\psi$ should provide a deflection

$$\vartheta(s_2) = - \cos \Delta\psi [\beta(s_1)\beta(s_2)]^{1/2} \vartheta(s_1).$$

The remaining relative deformations of the corrected orbit are:

between $s_2$ and $s_1$ ("outside" dipoles):

$$\hat{y}_c/\hat{y} = \sin \Delta\psi$$

between $s_1$ and $s_2$ ("between" dipoles):

$$\hat{y}_c/\hat{y} = [\cos \Delta\psi + 2\sin^2 \pi Q - \cos 2(\pi Q - \Delta\psi)]^{1/2} .$$

4.2.2 Distortions due to random errors

The number of magnet units m is assumed to be

[10,6]* $$m > 3Q .$$

a) r.m.s. value of y(s)

$$\langle y \rangle = \frac{\pi}{\sqrt{2}|\sin \pi Q|} \frac{R}{Q} \frac{|n|}{\rho} \frac{\langle \delta \rangle}{\sqrt{m}} ,$$

where $\delta$ is the position error of one of the m gradient magnets.

More generally, one has

$$\langle y \rangle = \frac{1}{2\sqrt{2}|\sin \pi Q|} \sqrt{\bar{\beta}} \sqrt{\sum_i m_i \beta_i \Psi_i^2}$$

where $\bar{\beta} = (1/C) \int_0^C \beta(s)ds$ and the equivalent kicks $\Psi_i$ are for the various cases of interest:

*) See page 43 for references

| Type of element | Source of kick | r.m.s. value | $\Psi_i$ | Directions |
|---|---|---|---|---|
| Gradient element | Displacement | $< \Delta y >$ | $K_i \ell_i < \Delta y >$ | x and z |
| Bending elements | Tilt | $< \Delta \Theta_e >$ | $\vartheta_i < \Delta \Theta_e >$ | z only |
| Bending elements | Field error | $<\Delta B/B>$ | $\vartheta_i <\Delta B/B>$ | x only |
| Straight sections | Stray field | $< \Delta B_s >$ | $\ell_i <\Delta B_s>/\rho B_{inj}$ | x and z |
| Gradient and bending elements | Displacement and field error | $< \Delta y >$ and $<\Delta B/B>$ | $K_i \ell_i [<\Delta y^2> + \rho^2/n^2 <(\Delta B/B)^2>]^{1/2}$ | x and z |

b) Value $\hat{y}$ not exceeded with a probability P

$$\hat{y}_P(s) = k(P) \left[ 1 + \frac{|\sin \pi Q|}{3} \right]^* \sqrt{\frac{\beta(s)}{\bar{\beta}}} \sqrt{2} < y >$$

with k(P) given by

[12,Fig.1]

| k \ P | 50% | 75% | 90% | 98% |
|---|---|---|---|---|
| rectangular vacuum chamber | 1.11 | 1.41 | 1.72 | 2.14 |
| elliptical vacuum chamber | 1.28 | 1.63 | 1.95 | 2.40 |

[11,Fig.2] *) This bracket takes into account the mean influence of higher harmonics.

## 5. EFFECTS OF VARIOUS FOCUSING PERTURBATIONS ON THE FREQUENCY AND AMPLITUDE OF BETATRON OSCILLATIONS

### 5.1 Change in frequency due to tuning of quadrupole lenses or gradient errors

The frequency shift is given by

[1,23]* $$\cos(2\pi Q) - \cos(2\pi Q_0) = 0.5 \sin(2\pi Q_0) \int_0^C \beta(s)k(s)ds$$

where $2\pi Q_0$ is the unperturbed phase shift around the orbit of length C and k(s) the focal constant of the perturbation(s).

In the case of small frequency shifts this becomes

$$\Delta Q = (1/4\pi) \int_0^C \beta(s)k(s)ds \ .$$

For m >> Q, random errors in m elements produce a shift

[1,27] $$\Delta Q = \frac{1}{4\pi} \sqrt{\sum_i m_i (\beta_i \ K_i \ \ell_i)^2} < \frac{\Delta K}{K} >$$

where the symbols are the same as in Section 4.2.2, pages 23 and 24.

### 5.2 Tuning of momentum dependent frequency shifts by means of sextupoles

To compensate a shift caused by $k(s) = -K(s)\Delta p/p$ one needs (in the case of an ideal closed orbit) a sextupole field $\partial^2 B_z/\partial x^2$ such that

$$\int_0^C \beta(s) \left[ \frac{\partial^2 B_z}{\partial x^2}(s)e(s) - B\rho k(s) \right] ds = 0$$

where e(s) is defined in Section 4.1 on page 22.

### 5.3 "Beating" of amplitudes

The beat factor characterising the amplitude function modified by gradient errors is

[1,25] $$G = [\beta(\text{actual})/\beta(\text{ideal})]_{max} \ .$$

---

*) See page 43 for references

In practice one is more interested in $(\Delta\hat{y}/\hat{y})_P = 0.5(G-1)$. Similarly as for the orbit (Section 4.2.2. page 23) one has:

$$(\Delta\hat{y}/\hat{y})_P = \frac{k(P)}{4}\left[\frac{1}{3} + \frac{1}{|\sin 2\pi Q|}\right]\sqrt{\sum_i m_i(\beta_i K_i \ell_i)^2} < \frac{\Delta K}{K} > .$$

5.4 Stopbands due to random gradient errors

The total width of the stopband is

$$\delta Q = 2\Delta Q$$

where the $\Delta Q$ is given in Section 5.1 on page 25.

## 6. SPACE CHARGE LIMIT

Symbols:

| | | |
|---|---|---|
| N | : | limit of the number of particles in the synchrotron |
| $B_f$ | : | bunching factor (< 1) |
| b[m] | : | mean semi-minor beam axis (vertical) |
| a[m] | : | mean semi-major beam axis (horizontal) |
| $\Delta(Q^2)$ | : | $Q_0^2 - Q^2 \approx 2Q_0\Delta Q$ |
| r | : | classical particle radius (= $e/\{4\pi\,\varepsilon_0\, m\, c^2_{[eV]}\}$, see p. 45) |
| 2h[m] | : | vertical aperture of the vacuum chamber |
| 2w[m] | : | horizontal aperture of the vacuum chamber |
| 2v[m] | : | height of the magnet gap. |

a) Individual particle limit (without neutralization)

[13,331]* $$N_{ind} = -0.5\,\pi\, b(a+b)(R\, r\, F)^{-1}\beta^2\gamma^3\, B_f\, \Delta(Q_i^2)$$

$$\approx -(\pi\,\epsilon_V\,\beta\gamma)(1+\sqrt{\epsilon_H/\epsilon_V})(rF)^{-1}\,\beta\gamma^2\, B_f\,\Delta Q_i$$

where

$$F = 1 + [b(a+b)/h^2]\{\mathcal{E}_1[1 + B_f(\gamma^2-1)] + \mathcal{E}_2\, B_f(\gamma^2-1)(h^2/v^2)\}$$

with $\mathcal{E}_1, \mathcal{E}_2$, the image force coefficients given on page 27, and $\epsilon_{H,V}$ in rad m .

---

*) See page 43 for references

| w/h | 1(circle) | 5/4 | 4/3 | 3/2 | 2/1 | ∞(parallel plates) |
|---|---|---|---|---|---|---|
| $\mathcal{E}_1$ | 0 | 0.090 | 0.107 | 0.134 | 0.172 | 0.206 |
| $\xi_1$ | 0.5 | 0.553 | 0.559 | 0.575 | 0.599 | 0.617 |

For parallel straight pole pieces, and to good approximation for wedged-shaped poles, the magnetostatic image coefficients have the values $\mathcal{E}_2 = 0.411$, $\xi_2 = 0.617$.

b) <u>Coherent particle limit</u> (without neutralization)

[13,342]* $$N_{coh} = -\pi Q_0 h^2 (R\ r\ F)^{-1} \beta^2 \gamma^3 B_f \Delta Q_c$$

where near an integral resonance

$$F = \xi_1 [1 + B_f(\gamma^2 - 1)] + \xi_2 B_f(\gamma^2 - 1) h^2/v^2$$

and near a half-integral resonance

[13a,150] $$F = \xi_1 + \mathcal{E}_1 B_f(\gamma^2 - 1) + \mathcal{E}_2 B_f(\gamma^2 - 1) h^2/v^2$$

with $\mathcal{E}_1$, $\mathcal{E}_2$, $\xi_1$ and $\xi_2$ as given above.

For $B_f\gamma^2 \gg 1$, one has near an integral resonance

$$N_{coh} \approx -\pi Q_0 h^2 [R r (\xi_1 + \xi_2 h^2/v^2)]^{-1} \gamma \Delta Q_c$$

*) See page 43 for references

ADDITIONAL FORMULAE

# P A R T III

## LONGITUDINAL PHASE SPACE

1. ACCELERATING VOLTAGE

$$V \sin \varphi_s [kV] = 10^{-3} \left[ C(\rho \dot{B} + B \dot{\rho}) - \dot{B} S_F \right] [m^2 \ T/s]$$

where the index s refers to the synchronous particle and $S_F$ is an equivalent area such that $B S_F$ is the total flux enclosed by C.

For $\dot{\rho} = S_F = 0$, one has

$$V \sin \varphi_s [kV] = 0.020958 \ R \ \dot{p} \ [m(GeV/c)/s]$$

(see Table I.1.1 for other expressions).

2. ACCELERATING FREQUENCY

$$f_a [Hz] = h \ f = h \ c \ \beta / C \qquad [s^{-1}]$$

$$= h \ c \ C^{-1} \ B \left[ B^2 [T^2] + \left( \frac{E_0 [MeV]}{c\rho [km^2/s]} \right)^2 \right]^{-1/2}$$

(see Table I.1.1 for other expressions).

See Section I.4.2.4, page 9, for differential relations.

3. SYNCHROTRON OSCILLATIONS

3.1 Equation of motion

(Above transition $\varphi$ should be replaced by $\varphi + \pi - 2\varphi_s$ ; for transition see Section I.4.2.3, page 8.)

$$d/dt[(\beta_s^2 \ E_s / \eta_s \ \Omega_s^2) \ \dot{\varphi}] = (h \ eV/2\pi)(\sin \varphi - \sin \varphi_s)$$

where $E_s$ is in keV, $\eta = \gamma_{tr}^{-2} - \gamma^{-2}$, and $\Omega$ is the particle angular velocity on the orbit of length C. To transform to other co-ordinates one has in the absence of perturbations

$$\begin{aligned} \dot{\varphi} &= h \ (\Omega_s - \Omega) \\ &= (h \ \Omega_s \ \eta_s \ \gamma_{tr}^{-2} / R) \Delta R \\ &= (h \ \Omega_s \ \eta_s / \beta_s \ \gamma_s)(\Delta p / m_0 c) \\ &= (h \ \Omega_s \ \eta_s / \beta_s^2 \ E_s) \Delta E \ . \end{aligned}$$

---

See page 1 for meaning of symbols

[14] 3.2 Bucket size

3.2.1 Without space charge effects

a) Bucket area, (half) height and coordinates

| Bucket area | Bucket (half) height | Coordinates* |
|---|---|---|
| $(heV)^{1/2}\ \alpha(\Gamma)\ (16\gamma/h)\ (2\pi\ E\lvert\eta\rvert)^{-1/2}$ | $(heV)^{1/2}Y(\Gamma)(\gamma/h)\ (\pi\ E\lvert\eta\rvert)^{-1/2}$ | $(\Delta p/m_0c) - \varphi$ |
| $(heV)^{1/2}\ \alpha(\Gamma)\ (16\beta/h)\ [E/(2\pi\lvert\eta\rvert)]^{1/2}$ | $(heV)^{1/2}Y(\Gamma)(\beta/h)[E/(\pi\lvert\eta\rvert)]^{1/2}$ | $(\Delta E) - \varphi$ |
| $(heV)^{1/2}\alpha(\Gamma)[16\alpha_p R/(h\beta)](2\pi E\lvert\eta\rvert)^{-1/2}$ | $(heV)^{1/2}Y(\Gamma)[R/(\gamma_{tr}^2 h\beta)](\pi E\lvert\eta\rvert)^{-1/2}$ | $(\Delta R) - \varphi$ |
| $(heV)^{1/2}\ \alpha(\Gamma)[16\beta/(h^2\Omega)][E/(2\pi\lvert\eta\rvert)]^{1/2}$ | $(heV)^{1/2}Y(\Gamma)[\beta/(h^2\Omega)][E/(\pi\lvert\eta\rvert)]^{1/2}$ | $(\Delta E/h\Omega) - \varphi$ |

For $\alpha(\Gamma)$ see below and Appendix C; for $\eta$ see Section 3.1 on preceeding page.

$$Y = Y(\Gamma) = \dot{\varphi}_{max}/(\sqrt{2}\,2\pi\ \nu_0)_{\varphi_s=0} = \dot{\varphi}_{max}(heV)^{-1/2}(\beta/\Omega)(\pi E\lvert\eta\rvert)^{1/2}$$ *[E and eV in keV, $\varphi$ in rad, $\Delta R$ in cm]

Ideal adiabatic trapping of a linac beam with $\pm\,\Delta E_L$ leads to a minimum bucket (half) height $\Delta E = (\pi/2)\Delta E_L$

b) Bucket width, normalised (half) height and area (see Appendix C for numbers)

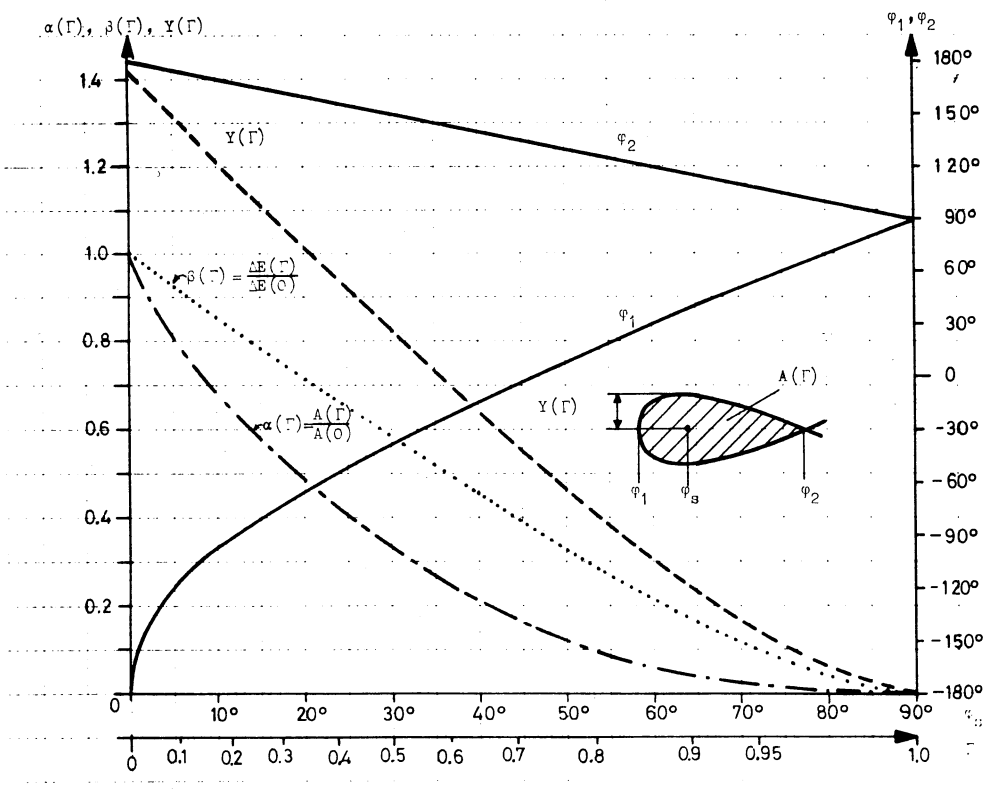

### 3.2.2 Reduction of bucket area due to space charge effects (below transition)

This reduction can be obtained from Fig. III.3.2.2, where

$$\Lambda\, A_{sp.c.} = 4\pi\, h\, g_c\, E_0\, r_p\, N/(ReV\, \gamma^2)$$

with

[15,3]

$N$ = number of accelerated particles

$g_c$ = 1 + 2 ln (vacuum chamber diameter/beam diameter)

$r_p$ = classical proton radius

and $E_0$ and eV are in the same units (as are $r_p$ and R).

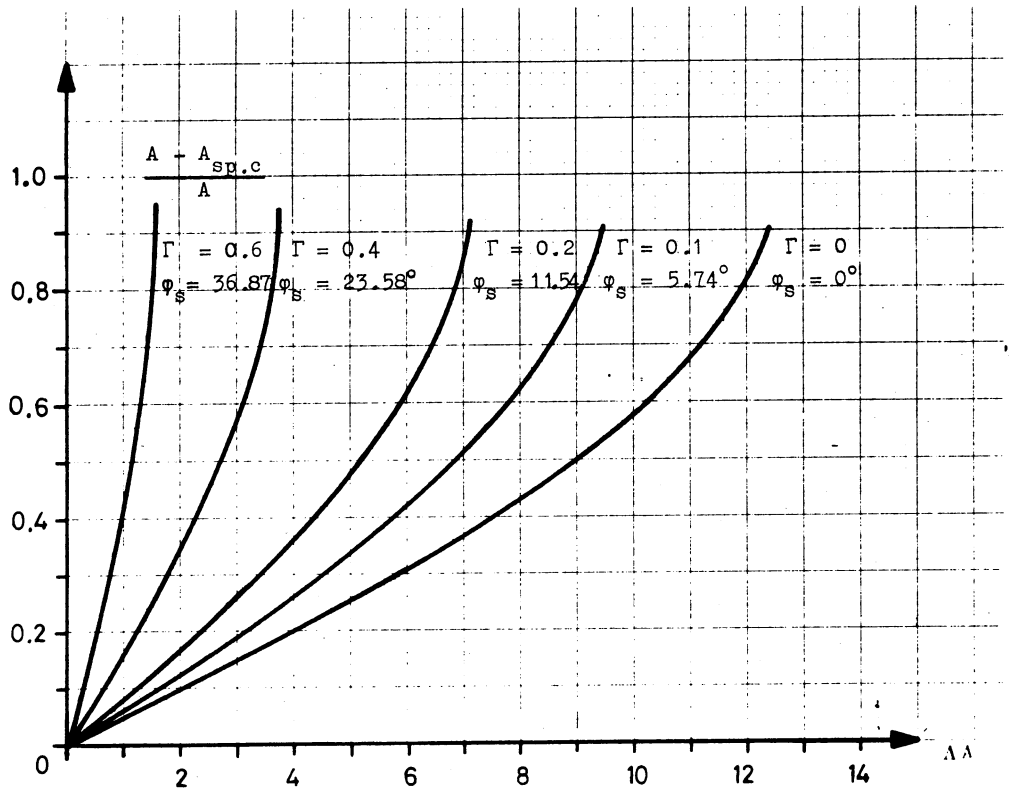


Fig. III.3.2.2 $(A - A_{sp.c})/A = f(\Lambda\, A_{sp.c.})$ (for constant density in phase space)

For $\varphi_s = 0^\circ$ (and a $\cos^2$ distribution in real space) one has

[18, Appendix IV]

$$A_{sp.c.}/A = [1 - g_c\, e\, h\, N/(4\pi\, \epsilon_0\, \gamma^2\, R\, V)]^{1/2}.$$

where V is in volts.

### 3.3 Frequency of synchrotron oscillations

In the case of small phase oscillation amplitudes around the stable phase $\varphi_s$, the equation of motion is

[17,10]* $$(\Delta\ddot{\varphi}) = (\delta^2 - 1)\delta^{-3}\, C'[\sin(\varphi_s + \Delta\varphi) - \sin\varphi_s] = (\delta^2 - 1)\delta^{-3}\, C' \cos\varphi_s\, \Delta\varphi$$

where $\delta^2 = \eta\,\gamma^2 + 1 = \alpha_p\gamma^2$ , $C' = 2\pi\, f_\infty^2\, \gamma_{tr}^{-3}\, eV/(hE_0)$ and eV and $E_0$ are in the same units. .(See Section I.4.2.3, page 8, for transition.)

The frequency of these oscillations is [eV and $E_s$ in same units]

[17,11] $$\nu_0 = [(1 - \delta^2)\delta^{-3}\, C' \cos\varphi_s]^{1/2}/(2\pi) = [f_\infty^2|\eta|eV \cos\varphi_s/(2\pi\, E_s h)]^{1/2} .$$

In terms of the bucket area A [in $\Delta p/(m_0c) - \varphi$ coordinates]:

$$\nu_0 = [A\, E_0\, f_\infty|\eta|/(16E_s\alpha(\Gamma))](|\cos\varphi_s|)^{1/2}$$

or

$$\nu_0 = [Ach|\eta|/(32\pi\, R_s\, \gamma_s\, \alpha(\Gamma))](|\cos\varphi_s|)^{1/2}.$$

Alternatively

[16,4] $$\nu_0 = \{[\cos\varphi_s/(4\pi^2)][c^2/(2\pi\, R^2\, E_0)](heV)(|1 - \gamma_{tr}^{-2}\,\gamma^2|)/\gamma^3\}^{1/2} .$$

### 3.4 Adiabatic damping of small-amplitude oscillations

$$\gamma(t) = \{1 + [B(t)/B(t_0)]^2\}^{1/2} .$$

#### 3.4.1 Phase amplitude [eV and $E_s$ in same units]

[16,3] $$\Delta\varphi(t) = D[eV(t)\cos\varphi_s]^{-1/4}\, [|1 - \gamma_{tr}^{-2}\,\gamma^2(t)|/\gamma^3(t)]^{1/4}$$

where

$$D = \text{constant} = \Delta\varphi_i[2\pi\, R^2\, E_0/(h\, c^2)]^{1/4}$$

with i denoting the initial values.

$$\Delta\varphi(t)/\Delta\varphi_i = [Vi/V(t)]^{1/4}\, [|1 - \gamma_{tr}^{-2}\,\gamma^2(t)/\gamma^3(t)]^{1/4}\, (|1 - \gamma_{tr}^{-2}\,\gamma_i^2|/\gamma_i^3)^{-1/4}.$$

---

*) See page 43 for references

### 3.4.2 Energy amplitude

$$\Delta E(t) = G[eV(t)\cos\varphi_s]^{1/4}\ \beta(t)[\gamma^3(t)/|1-\gamma_{tr}^{-2}\ \gamma^2(t)|]^{1/4}$$

where

$$G = \text{constant} = \Delta\varphi_i[E_0R/(hc)][h\ c^2/(2\pi\ R^2\ E_0)]^{1/4}$$

$$\Delta E(t)/\Delta E_i = [V(t)/V_i]^{1/4}[\beta(t)/\beta_i][|1-\gamma_{tr}^{-2}\ \gamma^2(t)|/\gamma^3(t)]^{-1/4}(|1-\gamma_{tr}^{-2}\gamma_i^2|/\gamma_i^3)^{1/4}.$$

### 3.4.3 Radial amplitude

$$\Delta R(t) = H[eV(t)\ \cos\ \varphi_s]^{1/4}[\beta(t)\ \gamma(t)]^{-1}[\gamma^3(t)/|1-\gamma_{tr}^{-2}\ \gamma^2(t)]^{1/4}$$

where

$$H = \Delta\varphi_i[\gamma_{tr}^{-2}\ R^2/(hc)][h\ c^2/(2\pi R^2E_0)]^{1/4}$$

$$\Delta R/\Delta R_i = [\beta_i\ \gamma_i/\beta(t)\gamma(t)]\ [\Delta\varphi_i/\Delta\varphi(t)]\ .$$

## 4. DEBUNCHING

### 4.1 Debunching time

In the absence of RF fields the beam "debunches"*) itself in the synchrotron (i.e. front end of one bunch reaches the tail of the next bunch ahead) after a time**)

$$t_{db} \approx (\pi - \Delta\varphi)[2\pi\ f_a|\gamma^{-2} - \gamma_{tr}^{-2}|\Delta p/p]^{-1}$$

where $2\Delta\varphi$ and $2\Delta p$ are the total phase and momentum spreads.

Special cases:

a) Low energy

$$\gamma^2 << \gamma_{tr}^2 \qquad \Delta\varphi << \pi \text{ (strong damping in linac)}$$

$$t_{db} = \gamma^2(2f_a\ \Delta p/p)^{-1}$$
$$= \gamma(\gamma+1)(2f_a\Delta T/T)^{-1}.$$

---

*) This azimuthal spreading does not involve any reduction of $\Delta p/p$.

**) Strictly valid for "rectangular" bunches. For "oval" bunches more time may be required in practice.

b) Well above transition

$\gamma^2 >> \gamma_{tr}^2$ $\Delta\varphi << \pi$ (damping in synchrotron)

$$t_{db} = \gamma_{tr}^2 (2f_a \, \Delta p/p)^{-1}$$

Complete overlapping (front end reaches centre of next bunch ahead) requires $2t_{db}$.

4.2 Travelling distance required for debunching

$$S_{db} = c \, \beta \, t_{db} \, .$$

For $\gamma^2 << \gamma_{tr}^2$ and $\Delta\varphi << \pi$ , this becomes with 2D = distance between centre of bunches

$$S_{db} = D/(\Delta\beta/\beta).$$

See Table I.1.1 for other expressions.

---

See page 1 for meaning of symbols

ADDITIONAL FORMULAE

# P A R T IV

## ROUGH EVALUATION OF MAJOR ACCELERATOR SYSTEMS

# 1. MAGNETS (non-saturated)

## 1.1 Bending magnet

a) Excitation current

$$N_B\ I[\text{ampere-turns}] = B\ h_B/\mu_0[\text{mT}/(\text{H m}^{-1})]$$

where $h_B$ is the (mean) gap height

$$N_B\ I/(B\ h_B) \approx 800 \text{ ampere-turns}/(0.1\text{T} \times 0.01 \text{ m gap height}).$$

b) Inductance

$$L_B[\text{H}] \approx N_B^2\ \mu_0\ w\ \ell_B/h_B$$

$$w = w_a + \frac{2}{3} w_c \qquad \text{(for window frame magnet)}$$

$$w = w_p + \frac{1}{2} h_B \qquad \text{(for magnet with poles)}$$

where

$w_a$ = aperture between coils, $w_c$ = coil width

$w_p$ = pole width

$\ell_B$ = the total magnetic length

c) Stored energy

$$W_B[\text{Ws}] \approx B^2\ h_B\ w\ \ell_B/(2\mu_0) \qquad [\text{T}^2\ \text{m}^3/(\text{H m}^{-1})]$$

where w is as in b).

## 1.2 Quadrupole lens

a) Excitation current per pole

$$N_Q I[\text{ampere-turns}] = g\ r_Q^2/(2\mu_0) \qquad [\text{Tm/H m}^{-1}]$$

$$N_Q I/(g\ r_Q^2) \approx 400 \text{ ampere-turns}/[10\ \text{T/m})(0.01 \text{ m bore radius})^2]$$

b) Inductance

$$L_Q[\text{H}] \approx 8\mu_0\ N_Q^2\ y_{max}(y_{max} + 2/3\ w_c)\ \ell_Q/r_Q^2$$

where $y_{max}$ is the distance from the lens centre to the coil face and $\ell_Q$ is the total magnetic length.

c) Stored energy

$$W_Q[\mathrm{Ws}] \approx g^2\ r_Q^2\ y_{max}(y_{max} + 2/3\ w_c)\ell_Q/\mu_0\ .$$

1.3 Bending magnet and quadrupole lens excited in series

$$B \approx N_B\ r_Q^2\ \beta\ \gamma\ K/\ (0.639\ h_B\ N_Q)\ ,\ (\text{for protons})$$

or

$$K \approx (0.6/p)(N_Q/N_B)(h_B/r_Q^2)\ B$$

where $r_Q$ and $h_B$ in m.

See Section II.1.4.d) for other expressions.

1.4 Cooling water requirements

To cool a conductor heated by a power loss N[kW], one needs a water flow of

$$G_w[\ell/s] \approx N/(4.2\ \Delta t) = 10^{-3}\ v\ A_F = 10^{-3}\ v\ F_s\ d_h^2\ ,$$

where

| | |
|---|---|
| $\Delta t_w[°C]$ | is the allowed temperature increase |
| $v[m/s]$ | is the velocity of the cooling water |
| $A_F[mm^2]$ | is the flow area |
| $F_s = A_F/d_h^2$ | is the shape factor ($= \pi/4$ for round holes) |
| $d_h[mm] = 4A_F/\text{perimeter}$ | is the hydraulic diameter. |

For turbulent flow the required pressure drop may be obtained from

$$\Delta P_w[kg/cm^2] = 0.18\ L_c\ v^{1.75}/(F_s^{1.75}\ d_h^{1.25})$$

where $L_c[m]$ = length of conductor, and it is noted that $0.18(\pi/4)^{-1.75} = 0.28$.

If $d_h$ is in metres, this becomes for round holes

[4,67]* $$\Delta P_w[kg/cm^2] = 5\ 10^{-5}\ L\ v^{1.75}/d_h^{1.25}.$$

Alternatively, one has (with somewhat more pessimistic assumptions about the pressure loss)

$$G_w[\ell/s] = 1.25\ 10^{-3}(1 + 0.009\ t_w)\ F_s\ d_h^{2.71}(\Delta P_w/L_c)^{0.57}$$

where $t_w[°C]$ is the water temperature.

---

*) See page 43 for references

## 2. FERRITE-LOADED RF ACCELERATING CAVITY

### 2.1 Basic quantities

Equivalent transmission line

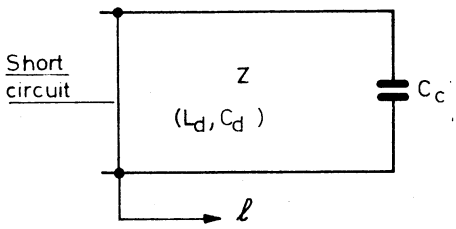


Cavity cross section

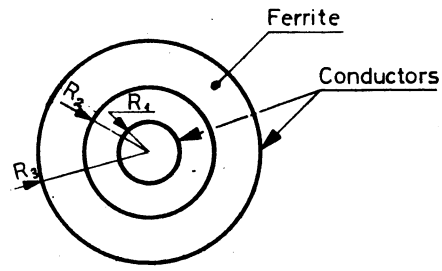


a) Effective permittivity and permeability

$$\epsilon_{eff} = \epsilon/[x + (1-x)\epsilon]$$

$$\mu_{eff} = 1 + x(\mu - 1) \approx \mu x$$

where $x = \ln(R_3/R_2)/\ln(R_3/R_1)$.

b) Inductance of ferrite cylindre of length $\ell_c$

$$L_d = [\mu_{eff}\ \mu_0\ \ell_c\ \ln(R_3/R_1)]/2\pi$$

c) Capacitance

$$C_d = 2\pi\ \epsilon_{eff}\ \epsilon_0\ \ell_c/\ln(R_3/R_1)$$

d) Characteristic impedance

$$Z = (L_d/C_d)^{1/2} = 60(\mu_{eff}/\epsilon_{eff})^{1/2}\ \ln(R_3/R_1)$$

e) Wavelength

$$\lambda = v/f_a = c/[f_a(\mu_{eff}\ \epsilon_{eff})^{1/2}] = \ell_c/[f_a(L_d\ C_d)^{1/2}]$$

### 2.2 Length of cavity

For resonance (assuming negligeable losses)

$$1/(w_0\ C_c) = Z\ \tan(2\pi\ \ell_c/\lambda) \qquad \text{i.e.}$$

$$\tan(2\pi\ \ell_c/\lambda) = (\omega_0\ C_c\ Z)^{-1},$$

which becomes for small arguments with $\omega_0 \approx (L_d\ C_c)^{-1/2}$

$$\ell_c \approx \lambda(C_d/C_c)^{1/2}/(2\pi).$$

## 2.3 Equivalent resonant circuit

If one knows the complex cavity admittance $Y = G + jB = (G^2 + B^2)^{1/2}\ e^{j\Phi}$ as a function of $\omega$, one can find $C_e$ from

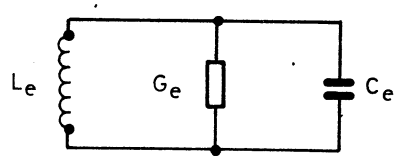


$$C_e = (G_e \tan \Phi)/(2\Delta\omega)$$

where the phase angle $\Phi$ pertains to the frequency $\omega = \omega_0 \pm \Delta\omega$, and hence

$$L_e = (\omega_0^2\ C_e)^{-1}\ .$$

The relation between the equivalent and the "real" quantities is as follows (on the basis of $B = B_e = 0$; $dB/d\omega = dB_e/d\omega$ for $\omega = \omega_0$)

$$C_e = 0.5\ C_c + 0.5\ C_d[\sin^2(2\pi\ \ell_c/\lambda)]^{-1}$$

$$L_e = 2L_d\left((2\pi\ \ell_c/\lambda)^2\ \{(C_c/C_d) + [\sin^2(2\pi\ \ell_c/\lambda)]^{-1}\}\right)^{-1}\ .$$

## 2.4 Longitudinal variation of power loss

$$P(\ell) = P_{max} \cos^2(2\pi\ \ell/\lambda)$$

$$\bar{P} = P_{max}\{\ 0.5 + [0.25\ \sin(4\pi\ell_c/\lambda)]/(2\pi\ell_c/\lambda)\}$$

where $P_{max}$ is the maximum loss (occuring at the short circuit) and the power loss per unit volume is assumed to be constant.

## 3. VACUUM PRESSURE REQUIRED

The natural growth of the beam emittance in either transverse plane is given by

[19,8]* $$\Delta(\varepsilon\beta\gamma)\,[\text{rad m}] = 0.32\ \varkappa P\,|\ln(1-\eta)| \int_{t_0}^{t_1} \beta^{-2}\gamma^{-1}\,dt\ [\text{m Torr s}]$$

where $\varkappa = R/Q$, P = nitrogen equivalent pressure and $\eta$ is the fraction of the particles contained in the emittance

| $\eta$ | 0.5 | 0.8 | 0.9 | 0.95 | 0.97 |
|---|---|---|---|---|---|
| $\lvert\ln(1-\eta)\rvert$ | 0.694 | 1.61 | 2.3 | 3.0 | 3.5 |

a) For $(\dot{\beta\gamma})$ = const, one has

$$\int_{t_0}^{t_1} \beta^{-2}\gamma^{-1}dt = (\dot{\beta\gamma})^{-1}\Big(1/\beta(t_0) - 1/\beta(t_1) + \ln\{\gamma(t_1)[1+\beta(t_1)]/\gamma(t_0)[1+\beta(t_0)]\}\Big) .$$

b) In the case of sinusoidal excitation of the magnet field

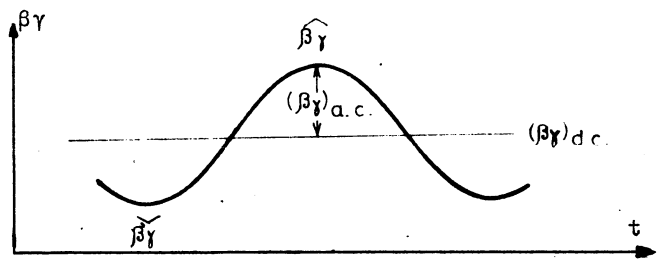


$$\beta(t)\gamma(t) = (\beta\gamma)_{d.c.} - (\beta\gamma)_{a.c.}\cos\omega_m t$$

$$= 0.5\ \{(\widehat{\beta\gamma}) + (\check{\beta\gamma}) - [(\widehat{\beta\gamma}) - (\check{\beta\gamma})]\cos\omega_m t\}$$

one has to good approximation (for $\hat{\beta} \approx 1$ and $\check{\beta} \ll 1$)

$$\int_{t_0}^{t_1} \beta^{-2}\gamma^{-1}\,dt \approx \pi(1/\check{\beta} + 1/\hat{\beta})/\{2\omega_m[(\widehat{\beta\gamma})(\check{\beta\gamma})]^{1/2}\} .$$

**REFERENCES** ([1,3] means page 3 of reference 1)


1. E.D. Courant and H.S. Snyder, "Theory of the Alternating Gradient Synchrotron", Annals of Physics, Vol. 3, 48 (1958).

2. H. Bruck, "Accélérateurs circulaires de particules", Paris, Presses Universitaires de France (1966).

3. S. Penner, "Calculations of Properties of Magnetic Deflection Systems", Rev. Scientific Inst., Vol. 32. 2, p. 150 (1960).

4. K.G. Steffen, "High Energy Beam Optics", New York, Interscience (1965).

5. A.A. Kolomensky and A.N. Lebedev, "Theory of Cyclic Accelerators", Amsterdam, North-Holland (1966).

6. J. Fronteau and R. Gouiran, "A Soviet Formalism in Betatron Oscillation Theory and its Comparison with other Concents", CERN 68-12 (1968).

7. R. Gouiran, "Focalisation et aberrations chromatiques des faisceaux de particules dans des dispositifs périodiques", CERN MPS/Int. MU/EP 67-4.

8. J.P. Blewett, "$\beta$-functions in Synchrotrons", Brookhaven National Laboratory, Internal Report, AADD-118, (1966).

9. C. Bovet, "Further Thoughts on the Transfer from Booster to CPS", CERN SI/Note DL/68-6.

10. G. Neyret and J. Parain, "Effets sur l'orbite de certains défauts de champ", C.E.N. Saclay GES. 65-05 ORB 17.

11. E. Keil, "A Monte Carlo Investigation of Closed Orbit Distortions in AG Synchrotrons", CERN AR/Int. SG/65-3.

12. P. Strolin, "Concerning Two-Dimensional Probability Distributions of Closed Orbit Distortions", CERN ISR-TH/68-4.

13. L.J. Laslett, "On Intensity Limitations imposed by Transverse Space Charge Effects in Circular Particle Accelerators, BNL 7534 (1963).

13.a L.J. Laslett and L. Resegotti, "The Space Charge Intensity Limit Imposed by Coherent Oscillation of a Bunched Synchrotron Beam", Proc. VI Acc. Conf. CEAL 2000 Cambridge 1967.

14. I. Gumowski, "CPS RF-Bucket, Width, Height and Area", CERN MPS/Int. RF 67-1.

15. K.H. Reich, "Summary of Theory of Synchrotron Oscillations in AG Proton Synchrotrons", Brookhaven National Laboratory, AADD Technical Note 13, (1965).

16. I. Gumowski, "Synchrotron Motion, Adiabatic Damping in Linear Approximation", CERN MPS/Int. RF 67-6.

17. P.L. Morton, "An Investigation of Space Charge Effects for the Booster Injector to the CPS", CERN SI/Int. DL/68-3.

18. U. Bigliani, "Système HF du Booster: Capture dans l'espace de phase longitudinal", CERN SI/Int. EL 68-2, Appendice IV.

19. W. Hardt, "A Few Simple Expressions for Checking Vacuum Requirements in a Proton Synchrotron", CERN ISR-300/GS/68-11.

APPENDIX A

## TABLE OF CONSTANTS

| Symbols | Meaning | Value | Units |
|---|---|---|---|
| $c$ | velocity of light | $2.997925\ 10^{8}$ | $ms^{-1}$ |
| $e$ | electronic charge | $1.6021\ 10^{-19}$ | C |
| $e/m_e$ | charge to mass ratio for an electron | $1.75880\ 10^{8}$ | $Cg^{-1}$ |
| $e/m_p$ | charge to mass ratio for a proton | $9.57896\ 10^{4}$ | $Cg^{-1}$ |
| $h$ | Planck's constant | $6.6256\ 10^{-34}$ | Js |
| $\hbar$ | Planck's constant/$2\pi$ | $1.0545\ 10^{-34}$ | Js |
| $h/e$ | quantum charge ratio | $4.1355\ 10^{-15}$ | $Js\ C^{-1}$ |
| $k$ | Boltzmann's constant ( | $1.3805\ 10^{-23}$ | J/(°K) |
| | ( | $8.6171\ 10^{-14}$ | GeV/(°K) |
| $m_d$ | rest mass of deuteron ( | $3.3433\ 10^{-27}$ | kg |
| | ( | $1.87558$ | $GeV/c^2$ |
| $m_e$ | rest mass of electron ( | $9.1091\ 10^{-31}$ | kg |
| | ( | $5.11006\ 10^{-4}$ | $GeV/c^2$ |
| $m_p$ | rest mass of proton ( | $1.6725\ 10^{-27}$ | kg |
| | ( | $0.93826$ | $GeV/c^2$ |
| $m_p/m_e$ | ratio of proton and electron masses | $1.83610\ 10^{3}$ | |
| $r_e$ | classical electron radius | $2.8178\ 10^{-15}$ | m |
| $r_d$ | classical deuteron radius | $0.76774\ 10^{-18}$ | m |
| $r_p$ | classical proton radius | $1.5347\ 10^{-18}$ | m |
| $\mu_0$ | permeability of free space ( | $= 4\pi \times 10^{-7}$ | $Hm^{-1}$ |
| | ( | $= 1.25664\times10^{-6}$ | |
| $\epsilon_0$ | permittivity of free space ( | $= (\mu_0 c^2)^{-1}$ | $Fm^{-1}$ |
| | ( | $= 8.8542\times 10^{-12}$ | |

These values are taken from the 48th edition of the CRC Handbook of Chemistry and Physics. (Still within the limits of errors of the values given in the 50th edition.)

## APPENDIX B

### GAUSSIAN DISTRIBUTIONS

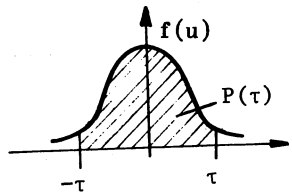


**Definitions:** $f(u) = (2\pi)^{-1/2}\exp(-u^2/2)$; $\overline{u^2} = 1$

$$P(\tau) = \int_{-\tau}^{\tau} f(u)du'$$

**One-dimensional density distribution:**

$$\rho(x) = (2\pi)^{-1/2}\,\sigma^{-1}\,\exp[-x^2/(2\sigma^2)] = \sigma^{-1} f(x/\sigma)$$

**Normalization:** $\int_{-\infty}^{\infty} \rho dx = 1$; $\int_{-x}^{x} \rho(x)dx = P(x/\sigma)$

**Variance:** $\overline{x^2} = \int_{-\infty}^{\infty} x^2 \rho dx = \sigma^2$

**Standard deviation:** $\overline{x^2}^{1/2} = \langle x \rangle = \sigma$

**Two-dimensional density distribution (x,z uncorrelated):**

$$\rho(x,z) = (2\pi\sigma_1\sigma_2)^{-1}\exp[-x^2/(2\sigma_1^2) - z^2/(2\sigma_2^2)] = (\sigma_1\sigma_2)^{-1} f(x/\sigma_1) f(z/\sigma_2)$$

**Normalization:** over the whole plane $\iint \rho dxdz = 1$

**Variances:** $\overline{x^2} = \sigma_1^2$ for any z or for all z; $\overline{z^2} = \sigma_2^2$ similarly

The ellipses $x^2/\sigma_1^2 + z^2/\sigma_2^2 = v^2$ are lines of constant $\rho$ with

$$\rho = (2\pi\sigma_1\sigma_2)^{-1}\exp(-v^2/2); \quad \overline{v^2} = 2.$$

Over this ellipse $\iint \rho dxdz = 1 - \exp(-v^2/2)$

| u,τ,v | f(u) | P(τ) | $1-\exp(-v^2/2)$ | $v/\sqrt{2}$ | $v^2/2$ |
|---|---|---|---|---|---|
| 0 | 0.399 | 0 | 0 | 0 | 0 |
| 0.5 | 0.352 | 0.383 | 0.118 | 0.354 | 0.125 |
| 0.674 | 0.318 | 0.500 | 0.203 | 0.477 | 0.227 |
| 0.707 | 0.311 | 0.520 | 0.221 | 0.500 | 0.250 |
| 1 | 0.242 | 0.683 | 0.393 | 0.707 | 0.500 |
| 1.414 | 0.147 | 0.843 | 0.632 | 1.000 | 1.000 |
| 1.5 | 0.130 | 0.866 | 0.675 | 1.061 | 1.125 |
| 2 | 0.0540 | 0.954 | 0.865 | 1.414 | 2.000 |
| 2.5 | 0.0175 | 0.9876 | 0.9561 | 1.768 | 3.125 |
| 2.797 | 0.0080 | 0.9948 | 0.980 | 1.978 | 3.912 |
| 3 | 0.0044 | 0.9973 | 0.9889 | 2.121 | 4.500 |
| ∞ | 0 | 1.000 | 1.000 | ∞ | ∞ |

## PROTON KINEMATICAL TABLE *)

$E_o$ = 938.26 MeV

| T [MeV] | cp [MeV] | Bρ [Tm] | β | $\beta^2$ | γ | $\gamma^2$ | βγ | $\beta^2\gamma$ | $\beta\gamma^2$ | $\beta^2\gamma^3$ |
|---|---|---|---|---|---|---|---|---|---|---|
| 20.00 | 194.7573 | 6.4964E-01 | 2.0324E-01 | 4.1307E-02 | 1.0213E+00 | 1.0431E+00 | 2.0757E-01 | 4.2187E-02 | 2.1200E-01 | 4.4005E-02 |
| 50.00 | 310.3643 | 1.0353E+00 | 3.1405E-01 | 9.8628E-02 | 1.0533E+00 | 1.1094E+00 | 3.3079E-01 | 1.0388E-01 | 3.4841E-01 | 1.1525E-01 |
| 200.00 | 644.4408 | 2.1496E+00 | 5.6616E-01 | 3.2054E-01 | 1.2132E+00 | 1.4718E+00 | 6.8685E-01 | 3.8887E-01 | 8.3326E-01 | 5.7232E-01 |
| 400.00 | 954.2578 | 3.1831E+00 | 7.1306E-01 | 5.0845E-01 | 1.4263E+00 | 2.0344E+00 | 1.0171E+00 | 7.2522E-01 | 1.4506E+00 | 1.4754E+00 |
| 500.00 | 1090.0734 | 3.6361E+00 | 7.5791E-01 | 5.7443E-01 | 1.5329E+00 | 2.3498E+00 | 1.1618E+00 | 8.8054E-01 | 1.7809E+00 | 2.0691E+00 |
| 600.00 | 1218.9799 | 4.0661E+00 | 7.9244E-01 | 6.2796E-01 | 1.6395E+00 | 2.6879E+00 | 1.2992E+00 | 1.0295E+00 | 2.1300E+00 | 2.7673E+00 |
| 700.00 | 1342.9684 | 4.4797E+00 | 8.1975E-01 | 6.7199E-01 | 1.7461E+00 | 3.0487E+00 | 1.4313E+00 | 1.1733E+00 | 2.4992E+00 | 3.5772E+00 |
| 750.00 | 1403.5277 | 4.6817E+00 | 8.3135E-01 | 6.9114E-01 | 1.7994E+00 | 3.2377E+00 | 1.4959E+00 | 1.2436E+00 | 2.6916E+00 | 4.0264E+00 |
| 800.00 | 1463.2694 | 4.8810E+00 | 8.4181E-01 | 7.0865E-01 | 1.8526E+00 | 3.4323E+00 | 1.5596E+00 | 1.3129E+00 | 2.8893E+00 | 4.5061E+00 |
| 850.00 | 1522.3475 | 5.0780E+00 | 8.5130E-01 | 7.2471E-01 | 1.9059E+00 | 3.6326E+00 | 1.6225E+00 | 1.3813E+00 | 3.0924E+00 | 5.0175E+00 |
| 900.00 | 1580.7808 | 5.2729E+00 | 8.5993E-01 | 7.3949E-01 | 1.9592E+00 | 3.8386E+00 | 1.6848E+00 | 1.4488E+00 | 3.3009E+00 | 5.5614E+00 |
| 950.00 | 1638.6562 | 5.4660E+00 | 8.6781E-01 | 7.5310E-01 | 2.0125E+00 | 4.0502E+00 | 1.7465E+00 | 1.5156E+00 | 3.5148E+00 | 6.1386E+00 |
| [GeV] | [GeV] | | | | | | | | | |
| 1.00 | 1.6960 | 5.6574E+00 | 8.7503E-01 | 7.6567E-01 | 2.0658E+00 | 4.2675E+00 | 1.8076E+00 | 1.5817E+00 | 3.7342E+00 | 6.7501E+00 |
| 3.00 | 3.8249 | 1.2758E+01 | 9.7121E-01 | 9.4324E-01 | 4.1974E+00 | 1.7618E+01 | 4.0765E+00 | 3.9592E+00 | 1.7111E+01 | 6.9754E+01 |
| 6.00 | 6.8745 | 2.2931E+01 | 9.9081E-01 | 9.8171E-01 | 7.3948E+00 | 5.4683E+01 | 7.3269E+00 | 7.2596E+00 | 5.4181E+01 | 3.9698E+02 |
| 8.00 | 8.8889 | 2.9650E+01 | 9.9448E-01 | 9.8898E-01 | 9.5264E+00 | 9.0753E+01 | 9.4738E+00 | 9.4215E+00 | 9.0251E+01 | 8.5502E+02 |
| 10.00 | 10.8979 | 3.6352E+01 | 9.9631E-01 | 9.9264E-01 | 1.1658E+01 | 1.3591E+02 | 1.1615E+01 | 1.1572E+01 | 1.3541E+02 | 1.5728E+03 |
| 12.00 | 12.9042 | 4.3044E+01 | 9.9737E-01 | 9.9474E-01 | 1.3790E+01 | 1.9015E+02 | 1.3753E+01 | 1.3717E+01 | 1.8965E+02 | 2.6084E+03 |
| 18.00 | 18.9150 | 6.3094E+01 | 9.9877E-01 | 9.9755E-01 | 2.0184E+01 | 4.0741E+02 | 2.0160E+01 | 2.0135E+01 | 4.0691E+02 | 8.2032E+03 |
| 21.00 | 21.9182 | 7.3111E+01 | 9.9909E-01 | 9.9817E-01 | 2.3382E+01 | 5.4671E+02 | 2.3360E+01 | 2.3339E+01 | 5.4621E+02 | 1.2760E+04 |
| 24.00 | 24.9206 | 8.3126E+01 | 9.9929E-01 | 9.9858E-01 | 2.6579E+01 | 7.0646E+02 | 2.6560E+01 | 2.6542E+01 | 7.0596E+02 | 1.8751E+04 |
| 27.00 | 27.9225 | 9.3139E+01 | 9.9944E-01 | 9.9887E-01 | 2.9777E+01 | 8.8665E+02 | 2.9760E+01 | 2.9743E+01 | 8.8615E+02 | 2.6372E+04 |
| 33.00 | 33.9253 | 1.1316E+02 | 9.9962E-01 | 9.9924E-01 | 3.6171E+01 | 1.3084E+03 | 3.6158E+01 | 3.6144E+01 | 1.3079E+03 | 4.7290E+04 |
| 76.00 | 76.9325 | 2.5662E+02 | 9.9993E-01 | 9.9985E-01 | 8.2001E+01 | 6.7242E+03 | 8.1995E+01 | 8.1989E+01 | 6.7237E+03 | 5.5131E+05 |
| 200.00 | 200.9361 | 6.7025E+02 | 9.9999E-01 | 9.9998E-01 | 2.1416E+02 | 4.5865E+04 | 2.1416E+02 | 2.1416E+02 | 4.5864E+04 | 9.8222E+06 |
| 300.00 | 300.9368 | 1.0038E+03 | 1.0000E+00 | 9.9999E-01 | 3.2074E+02 | 1.0287E+05 | 3.2074E+02 | 3.2074E+02 | 1.0287E+05 | 3.2996E+07 |
| 400.00 | 400.9372 | 1.3374E+03 | 1.0000E+00 | 9.9999E-01 | 4.2732E+02 | 1.8260E+05 | 4.2732E+02 | 4.2732E+02 | 1.8260E+05 | 7.8030E+07 |

*) See page 48 for values useful for PSB and CPS operation.

## RF "BUCKET" WIDTH, NORMALISED (HALF) HEIGHT AND AREA

(From Ref. 14; note that in this reference $Y(0) = \dot{\varphi}_{max}(0)[\sqrt{2}\,2\pi\ \nu_o(0)] = \sqrt{2}$ - rather than 2 - for computational convenience. See page 31 for other definitions and a graphical representation.)

All values of $\varphi_s$, $\varphi_1$, $\varphi_2$, $\Delta\varphi$ in degrees

| Stable phase | | "Bucket" width | | | Half height | | Area |
|---|---|---|---|---|---|---|---|
| $\varphi_s$ | $\Gamma$ | $\varphi_1$ | $\varphi_2$ | $\Delta\varphi$ | $Y(\Gamma)$ | $\beta = \frac{\Delta E(\Gamma)}{\Delta E(0)}$ | $\alpha = \frac{A(\Gamma)}{A(0)}$ |
| 0 | 0.000000 | -180.0 | 180 | 360 | 1.414214 | 1.000000 | 1.000000 |
| 1 | .017452 | -154.0 | 179 | 333 | 1.394803 | .986275 | .954105 |
| 2 | .034899 | -143.5 | 178 | 321 | 1.375347 | .972517 | .917558 |
| 3 | .052336 | -135.5 | 177 | 312 | 1.355847 | .958729 | .884511 |
| 4 | .069756 | -128.8 | 176 | 305 | 1.336309 | .944913 | .853741 |
| 5 | .087156 | -122.9 | 175 | 298 | 1.316736 | .931073 | .824676 |
| 6 | .104528 | -117.6 | 174 | 292 | 1.297132 | .917211 | .796983 |
| 7 | .121869 | -112.6 | 173 | 286 | 1.277500 | .903329 | .770443 |
| 8 | .139173 | -108.1 | 172 | 280 | 1.257846 | .889431 | .744906 |
| 9 | .156434 | -103.7 | 171 | 275 | 1.238171 | .875519 | .720257 |
| 10 | .173648 | -99.6 | 170 | 270 | 1.218482 | .861597 | .696413 |
| 11 | .190809 | -95.7 | 169 | 265 | 1.198781 | .847666 | .673303 |
| 12 | .207912 | -92.0 | 168 | 260 | 1.179072 | .833730 | .650875 |
| 13 | .224951 | -88.4 | 167 | 255 | 1.159360 | .819791 | .629082 |
| 14 | .241922 | -84.9 | 166 | 251 | 1.139648 | .805853 | .607888 |
| 15 | .258819 | -81.5 | 165 | 247 | 1.119940 | .791917 | .587261 |
| 16 | .275637 | -78.2 | 164 | 242 | 1.100240 | .777987 | .567174 |
| 17 | .292372 | -75.0 | 163 | 238 | 1.080552 | .764066 | .547603 |
| 18 | .309017 | -71.9 | 162 | 234 | 1.060881 | .750156 | .528529 |
| 19 | .325568 | -68.9 | 161 | 230 | 1.041230 | .736261 | .509933 |
| 20 | .342020 | -65.9 | 160 | 226 | 1.021603 | .722382 | .491799 |
| 21 | .358368 | -63.0 | 159 | 222 | 1.002004 | .708524 | .474114 |
| 22 | .374607 | -60.1 | 158 | 218 | .982438 | .694688 | .456865 |
| 23 | .390731 | -57.3 | 157 | 214 | .962907 | .680878 | .440040 |
| 24 | .406737 | -54.5 | 156 | 210 | .943418 | .667097 | .423630 |
| 25 | .422618 | -51.8 | 155 | 207 | .923972 | .653347 | .407624 |
| 26 | .438371 | -49.1 | 154 | 203 | .904576 | .639632 | .392015 |
| 27 | .453990 | -46.4 | 153 | 199 | .885232 | .625954 | .376794 |
| 28 | .469472 | -43.8 | 152 | 196 | .865945 | .612316 | .361955 |
| 29 | .484810 | -41.2 | 151 | 192 | .846719 | .598721 | .347489 |
| 30 | .500000 | -38.7 | 150 | 189 | .827559 | .585172 | .333392 |
| 31 | .515038 | -36.2 | 149 | 185 | .808467 | .571673 | .319657 |
| 32 | .529919 | -33.7 | 148 | 182 | .789450 | .558225 | .306279 |
| 33 | .544639 | -31.2 | 147 | 178 | .770510 | .544833 | .293252 |
| 34 | .559193 | -28.8 | 146 | 175 | .751653 | .531499 | .280571 |
| 35 | .573576 | -26.3 | 145 | 171 | .732882 | .518226 | .268231 |
| 36 | .587785 | -23.9 | 144 | 168 | .714202 | .505017 | .256229 |
| 37 | .601815 | -21.6 | 143 | 165 | .695618 | .491876 | .244560 |
| 38 | .615661 | -19.2 | 142 | 161 | .677132 | .478805 | .233218 |
| 39 | .629320 | -16.9 | 141 | 158 | .658751 | .465807 | .222202 |
| 40 | .642788 | -14.6 | 140 | 155 | .640479 | .452887 | .211505 |
| 41 | .656059 | -12.3 | 139 | 151 | .622319 | .440046 | .201125 |
| 42 | .669131 | -10.0 | 138 | 148 | .604277 | .427288 | .191058 |
| 43 | .681998 | -7.7 | 137 | 145 | .586357 | .414617 | .181301 |
| 44 | .694658 | -5.4 | 136 | 141 | .568564 | .402035 | .171848 |
| 45 | .707107 | -3.2 | 135 | 138 | .550902 | .389546 | .162698 |
| 46 | .719340 | -1.0 | 134 | 135 | .533376 | .377154 | .153845 |
| 47 | .731354 | 1.2 | 133 | 132 | .515991 | .364861 | .145288 |
| 48 | .743145 | 3.5 | 132 | 129 | .498752 | .352671 | .137022 |
| 49 | .754710 | 5.6 | 131 | 125 | .481664 | .340588 | .129044 |
| 50 | .766044 | 7.8 | 130 | 122 | .464732 | .328615 | .121349 |
| 51 | .777146 | 10.0 | 129 | 119 | .447960 | .316755 | .113936 |
| 52 | .788011 | 12.2 | 128 | 116 | .431354 | .305013 | .106800 |
| 53 | .798636 | 14.3 | 127 | 113 | .414919 | .293392 | .099938 |
| 54 | .809017 | 16.4 | 126 | 110 | .398660 | .281895 | .093346 |
| 55 | .819152 | 18.6 | 125 | 106 | .382583 | .270527 | .087021 |
| 56 | .829038 | 20.7 | 124 | 103 | .366694 | .259292 | .080959 |
| 57 | .838671 | 22.8 | 123 | 100 | .350997 | .248192 | .075156 |
| 58 | .848048 | 24.9 | 122 | 97 | .335499 | .237234 | .069609 |
| 59 | .857167 | 27.0 | 121 | 94 | .320206 | .226420 | .064314 |
| 60 | .866025 | 29.1 | 120 | 91 | .305123 | .215755 | .059267 |
| 61 | .874620 | 31.2 | 119 | 88 | .290258 | .205243 | .054464 |
| 62 | .882948 | 33.3 | 118 | 85 | .275616 | .194890 | .049902 |
| 63 | .891007 | 35.4 | 117 | 82 | .261203 | .184699 | .045576 |
| 64 | .898794 | 37.4 | 116 | 79 | .247028 | .174675 | .041482 |
| 65 | .906308 | 39.5 | 115 | 75 | .233096 | .164824 | .037616 |
| 66 | .913545 | 41.6 | 114 | 72 | .219416 | .155150 | .033974 |
| 67 | .920505 | 43.6 | 113 | 69 | .205994 | .145660 | .030551 |
| 68 | .927184 | 45.7 | 112 | 66 | .192840 | .136358 | .027344 |
| 69 | .933580 | 47.7 | 111 | 63 | .179960 | .127251 | .024346 |
| 70 | .939693 | 49.7 | 110 | 60 | .167365 | .118345 | .021555 |
| 71 | .945519 | 51.8 | 109 | 57 | .155063 | .109646 | .018964 |
| 72 | .951057 | 53.8 | 108 | 54 | .143065 | .101162 | .016569 |
| 73 | .956305 | 55.8 | 107 | 51 | .131380 | .092900 | .014365 |
| 74 | .961262 | 57.9 | 106 | 48 | .120020 | .084867 | .012347 |
| 75 | .965926 | 59.9 | 105 | 45 | .108998 | .077073 | .010509 |
| 76 | .970296 | 61.9 | 104 | 42 | .098325 | .069526 | .008845 |
| 77 | .974370 | 63.9 | 103 | 39 | .088017 | .062237 | .007350 |
| 78 | .978148 | 65.9 | 102 | 36 | .078089 | .055217 | .006018 |
| 79 | .981627 | 68.0 | 101 | 33 | .068558 | .048478 | .004842 |
| 80 | .984808 | 70.0 | 100 | 30 | .059444 | .042033 | .003816 |
| 81 | .987688 | 72.0 | 99 | 27 | .050769 | .035899 | .002933 |
| 82 | .990268 | 74.0 | 98 | 24 | .042558 | .030093 | .002185 |
| 83 | .992546 | 76.0 | 97 | 21 | .034841 | .024636 | .001565 |
| 84 | .994522 | 78.0 | 96 | 18 | .027654 | .019554 | .001064 |
| 85 | .996195 | 80.0 | 95 | 15 | .021041 | .014878 | .000675 |
| 86 | .997564 | 82.0 | 94 | 12 | .015058 | .010647 | .000386 |
| 87 | .998630 | 84.0 | 93 | 9 | .009781 | .006916 | .000188 |
| 88 | .999391 | 86.0 | 92 | 6 | .005325 | .003765 | .000068 |
| 89 | .999848 | 88.0 | 91 | 3 | .001883 | .001331 | .000012 |
| 90 | 1.000000 | 90.0 | 90 | 0 | 0.000000 | 0.000000 | 0.000000 |

| Stable phase | | "Bucket" width | | | Half height | | Area |
|---|---|---|---|---|---|---|---|
| $\Gamma$ | $\varphi_s$ | $\varphi_1$ | $\varphi_2$ | $\Delta\varphi$ | $Y(\Gamma)$ | $\beta = \frac{\Delta E(\Gamma)}{\Delta E(0)}$ | $\alpha = \frac{A(\Gamma)}{A(0)}$ |
| 0.000 | 0.000 | -180.0 | 180.0 | 360.0 | 1.414214 | 1.000000 | 1.000000 |
| .010 | .573 | -160.2 | 179.4 | 339.6 | 1.403098 | .992140 | .971542 |
| .020 | 1.146 | -152.2 | 178.9 | 331.0 | 1.391966 | .984268 | .948459 |
| .030 | 1.719 | -146.1 | 178.3 | 324.4 | 1.380816 | .976384 | .927384 |
| .040 | 2.292 | -141.0 | 177.7 | 318.7 | 1.369648 | .968488 | .907606 |
| .050 | 2.866 | -136.5 | 177.1 | 313.6 | 1.358463 | .960578 | .888790 |
| .060 | 3.440 | -132.4 | 176.6 | 309.0 | 1.347259 | .952656 | .870739 |
| .070 | 4.014 | -128.7 | 176.0 | 304.7 | 1.336035 | .944720 | .853324 |
| .080 | 4.589 | -125.2 | 175.4 | 300.7 | 1.324793 | .936770 | .836453 |
| .090 | 5.164 | -122.0 | 174.8 | 296.8 | 1.313530 | .928806 | .820058 |
| .100 | 5.739 | -118.9 | 174.3 | 293.2 | 1.302248 | .920828 | .804087 |
| .110 | 6.315 | -116.0 | 173.7 | 289.7 | 1.290944 | .912835 | .788498 |
| .120 | 6.892 | -113.2 | 173.1 | 286.3 | 1.279620 | .904828 | .773256 |
| .130 | 7.470 | -110.5 | 172.5 | 283.0 | 1.268273 | .896805 | .758334 |
| .140 | 8.048 | -107.8 | 172.0 | 279.8 | 1.256905 | .888766 | .743707 |
| .150 | 8.627 | -105.3 | 171.4 | 276.7 | 1.245513 | .880711 | .729355 |
| .160 | 9.207 | -102.9 | 170.8 | 273.7 | 1.234099 | .872640 | .715261 |
| .170 | 9.788 | -100.5 | 170.2 | 270.7 | 1.222661 | .864552 | .701408 |
| .180 | 10.370 | -98.2 | 169.6 | 267.8 | 1.211198 | .856447 | .687785 |
| .190 | 10.953 | -95.9 | 169.0 | 265.0 | 1.199711 | .848324 | .674379 |
| .200 | 11.537 | -93.7 | 168.5 | 262.2 | 1.188199 | .840183 | .661178 |
| .210 | 12.122 | -91.5 | 167.9 | 259.4 | 1.176660 | .832025 | .648175 |
| .220 | 12.709 | -89.4 | 167.3 | 256.7 | 1.165096 | .823847 | .635360 |
| .230 | 13.297 | -87.3 | 166.7 | 254.0 | 1.153504 | .815650 | .622725 |
| .240 | 13.887 | -85.3 | 166.1 | 251.4 | 1.141884 | .807434 | .610264 |
| .250 | 14.478 | -83.3 | 165.5 | 248.8 | 1.130236 | .799198 | .597969 |
| .260 | 15.070 | -81.3 | 164.9 | 246.2 | 1.118559 | .790941 | .585836 |
| .270 | 15.664 | -79.3 | 164.3 | 243.7 | 1.106853 | .782663 | .573859 |
| .280 | 16.260 | -77.4 | 163.7 | 241.1 | 1.095116 | .774364 | .562033 |
| .290 | 16.858 | -75.5 | 163.1 | 238.6 | 1.083348 | .766043 | .550352 |
| .300 | 17.458 | -73.6 | 162.5 | 236.1 | 1.071549 | .757699 | .538814 |
| .310 | 18.059 | -71.7 | 161.9 | 233.7 | 1.059717 | .749333 | .527414 |
| .320 | 18.663 | -69.9 | 161.3 | 231.2 | 1.047851 | .740943 | .516149 |
| .330 | 19.269 | -68.1 | 160.7 | 228.8 | 1.035952 | .732529 | .505014 |
| .340 | 19.877 | -66.2 | 160.1 | 226.4 | 1.024018 | .724090 | .494007 |
| .350 | 20.487 | -64.4 | 159.5 | 224.0 | 1.012048 | .715626 | .483126 |
| .360 | 21.100 | -62.7 | 158.9 | 221.6 | 1.000042 | .707137 | .472366 |
| .370 | 21.716 | -60.9 | 158.3 | 219.2 | .987998 | .698620 | .461727 |
| .380 | 22.334 | -59.1 | 157.7 | 216.8 | .975916 | .690077 | .451204 |
| .390 | 22.954 | -57.4 | 157.0 | 214.4 | .963795 | .681506 | .440797 |
| .400 | 23.578 | -55.7 | 156.4 | 212.1 | .951634 | .672907 | .430502 |
| .410 | 24.205 | -53.9 | 155.8 | 209.7 | .939431 | .664278 | .420319 |
| .420 | 24.835 | -52.2 | 155.2 | 207.4 | .927186 | .655619 | .410244 |
| .430 | 25.468 | -50.5 | 154.5 | 205.0 | .914897 | .646930 | .400277 |
| .440 | 26.104 | -48.8 | 153.9 | 202.7 | .902564 | .638209 | .390416 |
| .450 | 26.744 | -47.1 | 153.3 | 200.4 | .890185 | .629456 | .380659 |
| .460 | 27.387 | -45.4 | 152.6 | 198.0 | .877759 | .620669 | .371005 |
| .470 | 28.034 | -43.7 | 152.0 | 195.7 | .865285 | .611849 | .361452 |
| .480 | 28.685 | -42.0 | 151.3 | 193.4 | .852761 | .602993 | .352000 |
| .490 | 29.341 | -40.4 | 150.7 | 191.0 | .840186 | .594101 | .342647 |

| Stable phase | | "Bucket" width | | | Half height | | Area |
|---|---|---|---|---|---|---|---|
| $\Gamma$ | $\varphi_s$ | $\varphi_1$ | $\varphi_2$ | $\Delta\varphi$ | $Y(\Gamma)$ | $\beta = \frac{\Delta E(\Gamma)}{\Delta E(0)}$ | $\alpha = \frac{A(\Gamma)}{A(0)}$ |
| .500 | 30.000 | -38.7 | 150.0 | 188.7 | .827559 | .585172 | .333392 |
| .510 | 30.664 | -37.0 | 149.3 | 186.3 | .814877 | .576205 | .324234 |
| .520 | 31.332 | -35.3 | 148.7 | 184.0 | .802140 | .567199 | .315173 |
| .530 | 32.005 | -33.7 | 148.0 | 181.7 | .789346 | .558152 | .306207 |
| .540 | 32.684 | -32.0 | 147.3 | 179.3 | .776493 | .549064 | .297335 |
| .550 | 33.367 | -30.3 | 146.6 | 176.9 | .763580 | .539932 | .288558 |
| .560 | 34.056 | -28.6 | 145.9 | 174.6 | .750603 | .530757 | .279873 |
| .570 | 34.750 | -26.9 | 145.2 | 172.2 | .737562 | .521535 | .271282 |
| .580 | 35.451 | -25.3 | 144.5 | 169.8 | .724455 | .512267 | .262782 |
| .590 | 36.157 | -23.6 | 143.8 | 167.4 | .711278 | .502949 | .254375 |
| .600 | 36.870 | -21.9 | 143.1 | 165.0 | .698030 | .493582 | .246059 |
| .610 | 37.590 | -20.2 | 142.4 | 162.6 | .684708 | .484162 | .237834 |
| .620 | 38.316 | -18.5 | 141.7 | 160.2 | .671310 | .474688 | .229701 |
| .630 | 39.050 | -16.8 | 140.9 | 157.7 | .657833 | .465158 | .221658 |
| .640 | 39.792 | -15.0 | 140.2 | 155.2 | .644273 | .455570 | .213706 |
| .650 | 40.542 | -13.3 | 139.5 | 152.8 | .630629 | .445922 | .205845 |
| .660 | 41.300 | -11.6 | 138.7 | 150.3 | .616896 | .436211 | .198074 |
| .670 | 42.067 | -9.8 | 137.9 | 147.7 | .603071 | .426436 | .190394 |
| .680 | 42.844 | -8.1 | 137.2 | 145.2 | .589151 | .416592 | .182806 |
| .690 | 43.630 | -6.3 | 136.4 | 142.6 | .575130 | .406678 | .175309 |
| .700 | 44.427 | -4.5 | 135.6 | 140.1 | .561006 | .396691 | .167904 |
| .710 | 45.235 | -2.7 | 134.8 | 137.4 | .546772 | .386626 | .160591 |
| .720 | 46.054 | -.8 | 133.9 | 134.8 | .532425 | .376482 | .153372 |
| .730 | 46.886 | 1.0 | 133.1 | 132.1 | .517959 | .366252 | .146245 |
| .740 | 47.731 | 2.9 | 132.3 | 129.4 | .503368 | .355935 | .139214 |
| .750 | 48.590 | 4.7 | 131.4 | 126.7 | .488645 | .345524 | .132277 |
| .760 | 49.464 | 6.7 | 130.5 | 123.9 | .473784 | .335016 | .125437 |
| .770 | 50.354 | 8.6 | 129.6 | 121.1 | .458778 | .324405 | .118694 |
| .780 | 51.261 | 10.6 | 128.7 | 118.2 | .443616 | .313684 | .112050 |
| .790 | 52.186 | 12.6 | 127.8 | 115.3 | .428292 | .302848 | .105507 |
| .800 | 53.130 | 14.6 | 126.9 | 112.3 | .412793 | .291889 | .099065 |
| .810 | 54.096 | 16.7 | 125.9 | 109.2 | .397110 | .280799 | .092728 |
| .820 | 55.085 | 18.8 | 124.9 | 106.2 | .381228 | .269569 | .086497 |
| .830 | 56.099 | 20.9 | 123.9 | 103.0 | .365135 | .258189 | .080375 |
| .840 | 57.140 | 23.1 | 122.9 | 99.7 | .348813 | .246648 | .074364 |
| .850 | 58.212 | 25.4 | 121.8 | 96.4 | .332245 | .234933 | .068467 |
| .860 | 59.317 | 27.7 | 120.7 | 93.0 | .315408 | .223027 | .062690 |
| .870 | 60.459 | 30.1 | 119.5 | 89.5 | .298278 | .210915 | .057034 |
| .880 | 61.642 | 32.6 | 118.4 | 85.8 | .280826 | .198574 | .051506 |
| .890 | 62.873 | 35.1 | 117.1 | 82.0 | .263017 | .185981 | .046111 |
| .900 | 64.158 | 37.8 | 115.8 | 78.1 | .244809 | .173106 | .040856 |
| .910 | 65.505 | 40.5 | 114.5 | 73.9 | .226151 | .159913 | .035748 |
| .920 | 66.926 | 43.5 | 113.1 | 69.6 | .206977 | .146355 | .030797 |
| .930 | 68.435 | 46.6 | 111.6 | 65.0 | .187205 | .132374 | .026015 |
| .940 | 70.052 | 49.9 | 109.9 | 60.1 | .166724 | .117891 | .021416 |
| .950 | 71.805 | 53.4 | 108.2 | 54.8 | .145379 | .102798 | .017021 |
| .960 | 73.740 | 57.3 | 106.3 | 48.9 | .122944 | .086935 | .012855 |
| .970 | 75.930 | 61.8 | 104.1 | 42.3 | .099059 | .070045 | .008956 |
| .980 | 78.522 | 67.0 | 101.5 | 34.5 | .073066 | .051666 | .005385 |
| .990 | 81.890 | 73.8 | 98.1 | 24.3 | .043435 | .030713 | .002260 |
| 1.000 | 90.000 | 90.0 | 90.0 | 0.0 | 0.000000 | 0.000000 | 0.000000 |