A 1-SI-6305-031-02-B

PROJECTION

THIS DRAWING CONFORMS TO B.S.8888

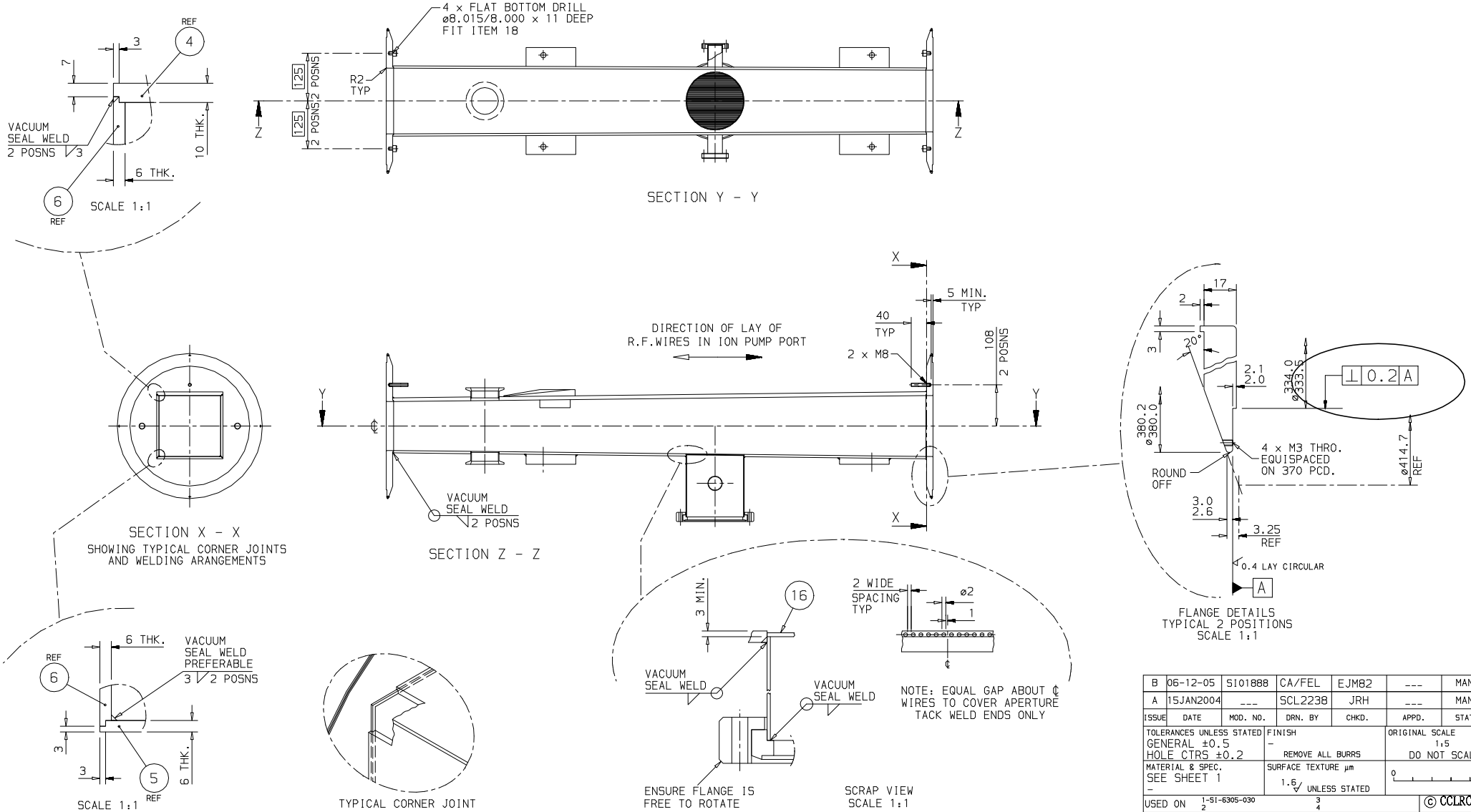

ISSUE	DATE	MOD. NO.	DRN. BY	CHKD.	APPD.	STATUS
B	06-12-05	SI01888	CA/FEL	EJM82	---	MANUF.
A	15JAN2004	---	SCL2238	JRH	---	MANUF.

TOLERANCES UNLESS STATED
GENERAL ±0.5
HOLE CTRS ±0.2

FINISH
–
REMOVE ALL BURRS

ORIGINAL SCALE
1:5
DO NOT SCALE

MATERIAL & SPEC.
SEE SHEET 1
–

SURFACE TEXTURE µm
1.6 UNLESS STATED

0 250mm

USED ON 1-SI-6305-030 2 3 4

© CCLRC 2005

THE CENTRAL LABORATORY OF THE RESEARCH COUNCILS RUTHERFORD APPLETON LABORATORY, CHILTON, OXON OX11 0QX.

TITLE
VACUUM CHAMBER

MODULE 113-MICE

SP7 S'S-ISIS

A 1-SI-6305-031-02-B

SHEET 2 OF 3 SHEETS B

A 1-SI-6305-031-02-B