A 1-SI-6305-031-01-B

PROJECTION -⊕- -E-

THIS DRAWING CONFORMS TO B.S.8888

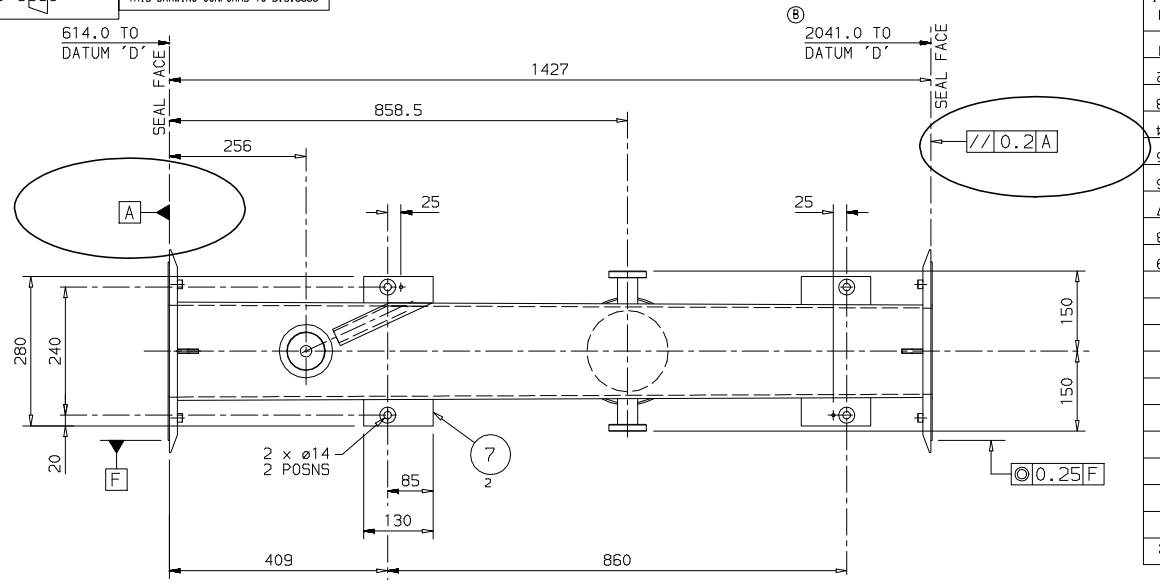

PLAN VIEW

ITEM No	DRAWING No CATALOGUE No	DESCRIPTION	No OFF a	No OFF b	No OFF c	REMARKS
1	THIS	FLANGE ø380	1	–	–	ST.STL BS EN10088:PT 2 1.430T/AISI 304L
2	THIS	FLANGE ø380	1	–	–	ST.STL BS EN10088:PT 2 1.430T/AISI 304L
3	THIS	CUTTER PORT	2	–	–	ST.STL BS EN10088:PT 2 1.430T/AISI 304L
4	THIS	TOP PLATE	1	–	–	ST.STL BS EN10088:PT 2 1.430T/AISI 304L
5	THIS	BOTTOM PLATE	1	–	–	ST.STL BS EN10088:PT 2 1.430T/AISI 304L
6	THIS	SIDE PLATE	2	–	–	ST.STL BS EN10088:PT 2 1.430T/AISI 304L
7	THIS	MOUNTING PLATE	2	–	–	ST.STL BS EN10088:PT 2 1.430T/AISI 304L
8	THIS	WINDOW PORT	1	–	–	ST.STL BS EN10088:PT 2 1.430T/AISI 304L
9	–	–	–	–	–	–
10	–	–	–	–	–	–
11	–	–	–	–	–	–
12	–	–	–	–	–	–
13	THIS	STUD M8	2	–	–	STA.STEEL M8 x 50
14	THIS	TUBE O/D 152 x I/D 149	1	–	–	ST.STL BS EN10088:PT 2 1.430T/AISI 304L
15	THIS	TUBE O/D 38 x I/D 33.7	2	–	–	ST.STL BS EN10088:PT 2 1.430T/AISI 304L
16	THIS	ø2 STA.STEEL WIRE	AR	–	–	ST.STL BS EN10088:PT 2 1.430T/AISI 304L
17	–	–	–	–	–	–
18	WDS 811-216	BUTTON	4	–	–	SEE NOTE 4
19	DN 160 CF-R	ROTATABLE FLANGE	1	–	–	CLRC SUPPLY
20	DN 40 CF-F	FIXED FLANGE	2	–	–	CLRC SUPPLY

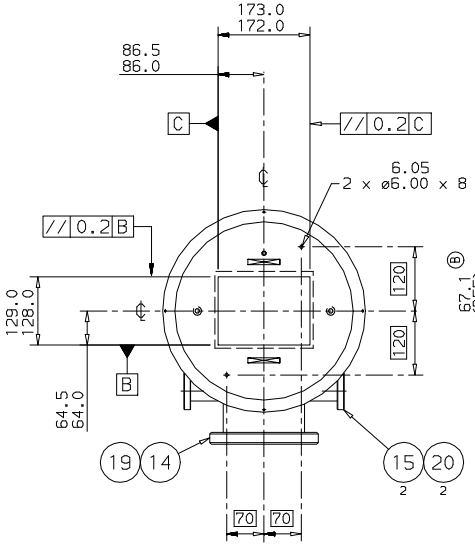

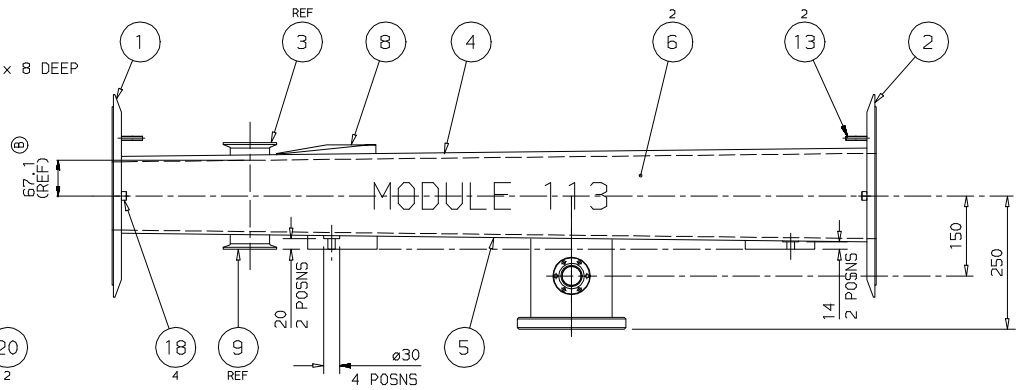

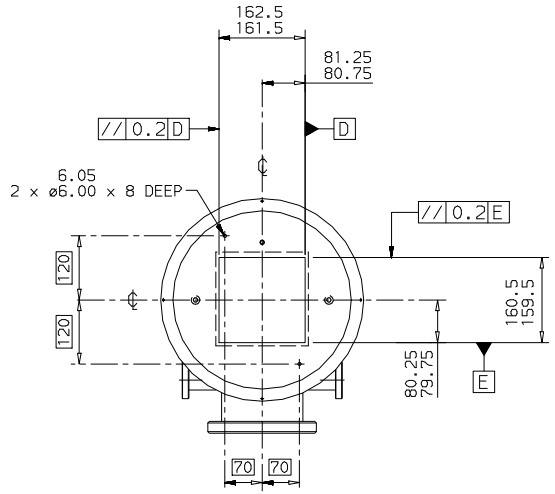

NOTES:-

1. VACUUM CHAMBER TO BE MANUFACTURED INACCORDANCE WITH CLRC SPECIFICATION ISIS/VAC/SPEC/08/02

2. PAINT ON THE TOP SURFACE OF CHAMBER THE EXACT WEIGHT AND DRAWING NUMBER IN 15mm HIGH CHARCTERS USING EPOXY PAINT ETCH THE SAME INFORMATION IN 10mm HIGH CHARACTERS ON THE INSIDE FACE OF FLANGE. WHERE SHOWN

3. PAINT ON BOTH SIDE WALLS OF CHAMBER MODULE 113 IN 50 mm HIGH CHARACTERS USING EPOXY PAINT. WHERE SHOWN

4. AVAILABLE FROM WDS STANDARD PARTS
POLLARD LANE
LEEDS LS13 1EH
Tel:- 0113 258 1333
Fax:- 0113 259 0649

SHEET 1 OF 3 SHEETS

ISSUE	DATE	MOD. NO.	DRN. BY	CHKD.	APPD.	STATUS
B	06-12-05	SI01888	CA/FEL	EJM82	---	MANUF.
A	15JAN2004	---	SCL2238	JRH	---	MANUF.

TOLERANCES UNLESS STATED
GENERAL ±0.5
HOLE CTRS ±0.2

FINISH
CLEAN
REMOVE ALL BURRS

ORIGINAL SCALE
1:5
DO NOT SCALE

MATERIAL & SPEC.
SEE ITEM LIST
–

SURFACE TEXTURE µm
– ✓ UNLESS STATED

0 250mm

USED ON 1-SI-6305-030 – –

© CCLRC 2005

THE CENTRAL LABORATORY OF THE RESEARCH COUNCILS RUTHERFORD APPLETON LABORATORY, CHILTON, OXON OX11 0QX.

TITLE
VACUUM CHAMBER

MODULE 113-MICE TEST BEAM SP7. S/S-ISIS

A 1-SI-6305-031-01-B

A 1-SI-6305-031-01-B

Printed by : ejm82 on 05-Oct-07