A0-SI-5100-009-02-A

PROJECTION

THIS DRAWING CONFORMS TO B.S.8888

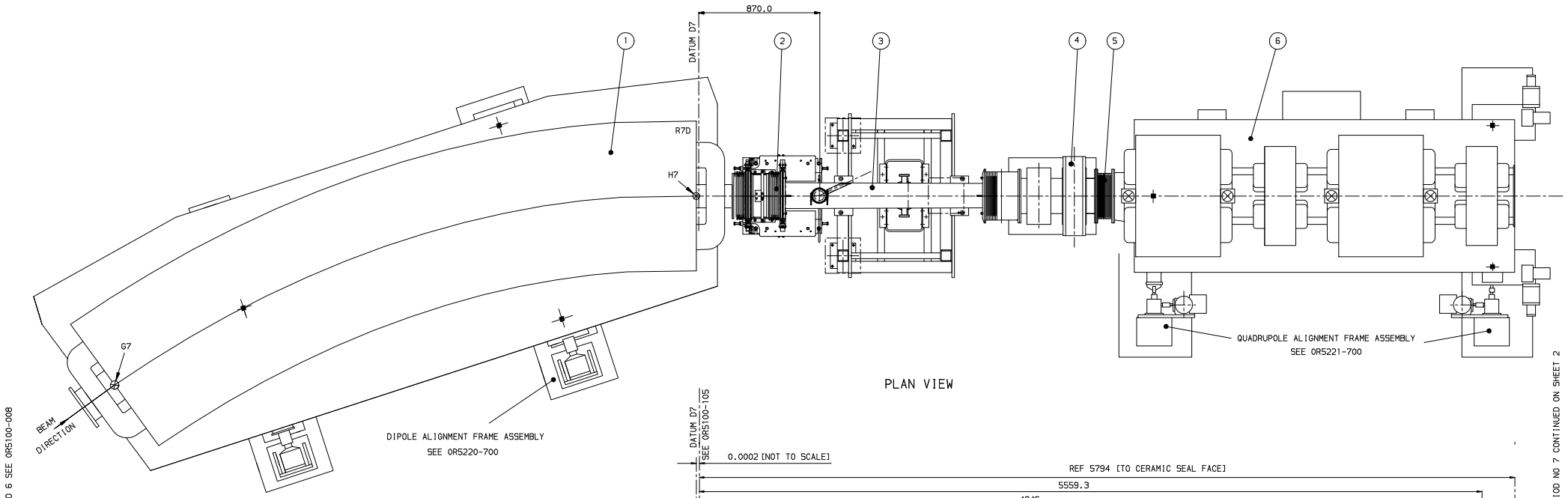

PLAN VIEW

NOTE-FOR SUPERPERIOD NO 6 SEE OR5100-008

NOTE - SUPERPERIOD NO 7 CONTINUED ON SHEET 2

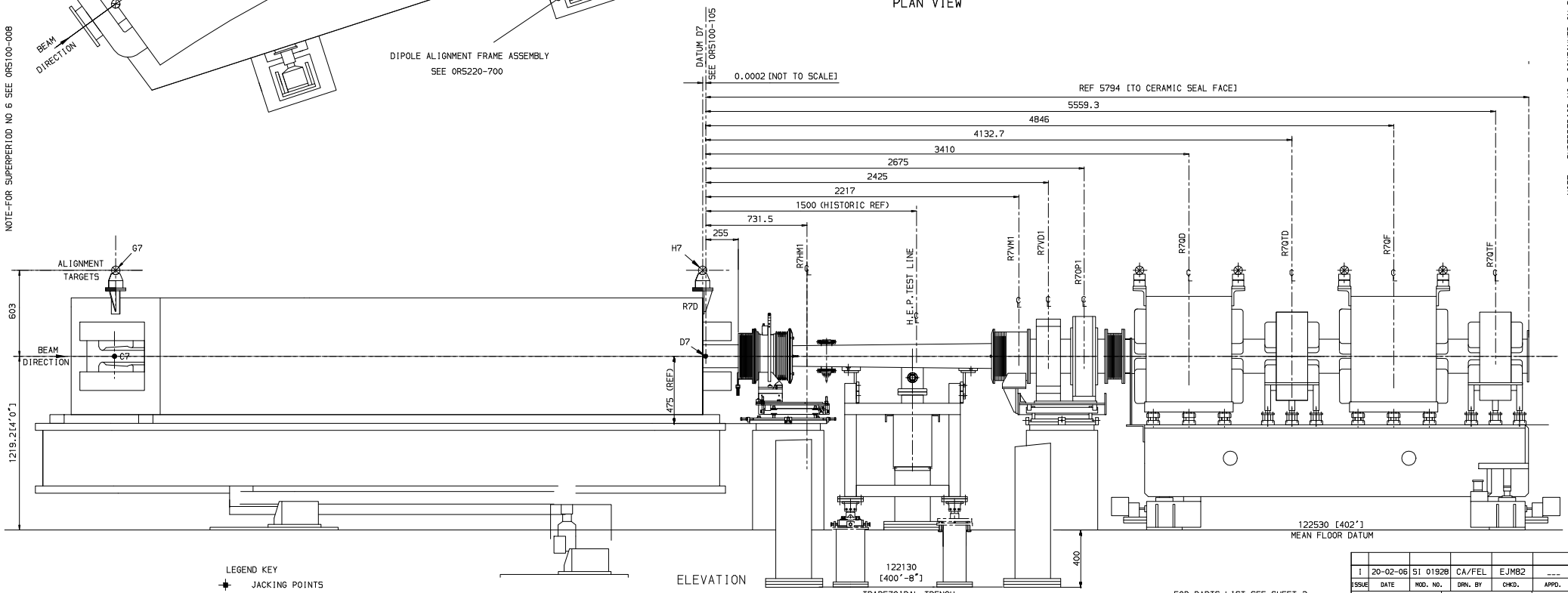

ELEVATION

LEGEND KEY

- JACKING POINTS
- ALIGNMENT POINTS

FOR PARTS LIST SEE SHEET 3

NOTE! ITEM 12 REMOVED ON THIS SHEET FOR CLARITY

SHEET 2 OF 3 SHEETS

ISSUE	DATE	MOD. NO.	DRN. BY	CHKD.	APPD.	STATUS
I	20-02-06	SI 01928	CA/FEL	EJMB2	---	MANUF.

TOLERANCES UNLESS STATED – – –

FINISH – – REMOVE ALL BURRS

ORIGINAL SCALE 1:10 DO NOT SCALE

MATERIAL & SPEC. – – –

SURFACE TEXTURE µm – ✓ UNLESS STATED

0 500mm

USED ON – OR5100-001 – –

© CCLRC 2006

THE CENTRAL LABORATORY OF THE RESEARCH COUNCILS RUTHERFORD APPLETON LABORATORY, CHILTON, OXON OX11 0QX.

TITLE SUPERPERIOD 7-SHORT ST

SHORT STRAIGHT ISIS

A0-SI-5100-009-22-I

A0-SI-5100-009-02-A

Printed by : ejs82 on 25-Sep-08