A0-SI-5100-009-03-J

PROJECTION

THIS DRAWING CONFORMS TO B.S.8888

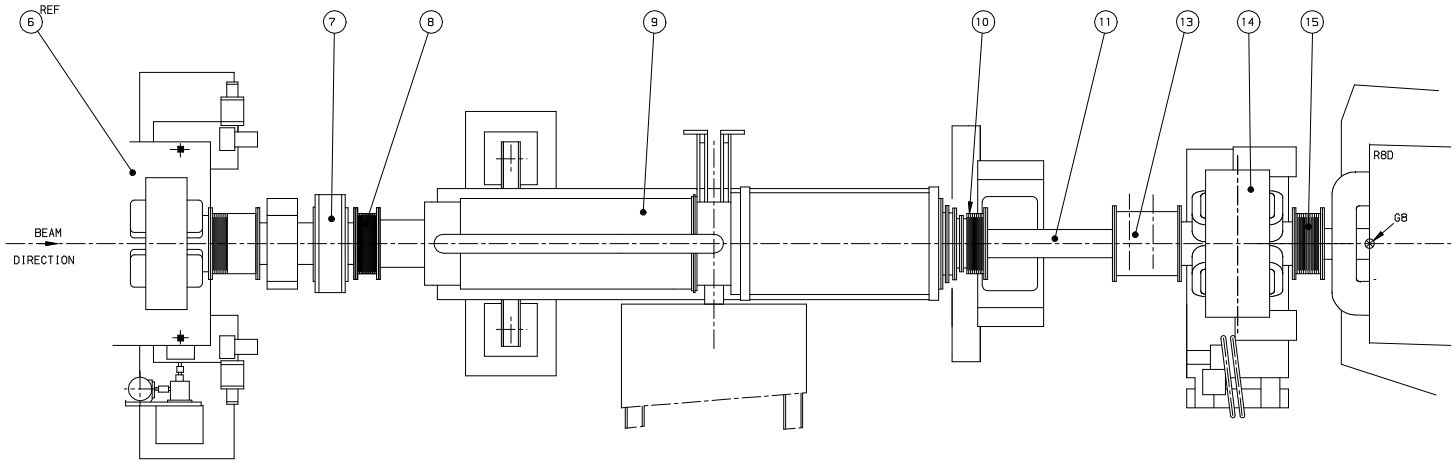

PLAN VIEW

ITEM No.	CAT. No.	DESCRIPTION	No. OFF	WATER SERVICES	MODULE
1	OR-5200-201	DIPOLE MAGNET ASSY	1		1
2	A1-SI-6258-620	HORIZ. BEAM MONITOR ASSY	1		114
3	A1-SI-6305-030	MODULE 113	1		113
4	A1-SI-5223-727	MODULE No.9	1		9
5	A1-SI-5240-160	BELLOWS/R.F.SCREEN ASSY	1		67
6	OR5100-020	QUADRUPOLE MAGNET ASSY	1		11
7	A1-SI-5223-726	HORIZ.BM/HORIZ.DIPOLE/OCTUPOLE	1		13
8	A1-SI-5240-163	BELLOWS/R.F.SCREEN ASSY	1		71
9	A0-SI-5250-202	R.F.CAVITY/SUPPORT STAND	1		25
10	A1-SI-5240-165	BELLOWS/R.F.SCREEN ASSY	1		73
11	A0-SI-5240-249/5	VAC.VESSEL/FRAME	1		36
12	A0-SI-6305-200	MICE-TARGET MOUNTING	1		-
13	A0-SI-6258-111	HIGH GAIN VERT.POSN. MONITOR	1		82
14	A0-SI-5221-540	QX106 AND STAND	1		30
15	A1-SI-5240-169	BELLOWS/R.F.SCREEN ASSY	1		76
16					
17					
18					
19					
20					
21					
22					
23					

NOTE FOR SUPERPERIOD N07-SHORT STRAIGHT SEE SHEETS 1 & 2

NOTE FOR SUPERPERIOD NO 8 SEE OR5100-010

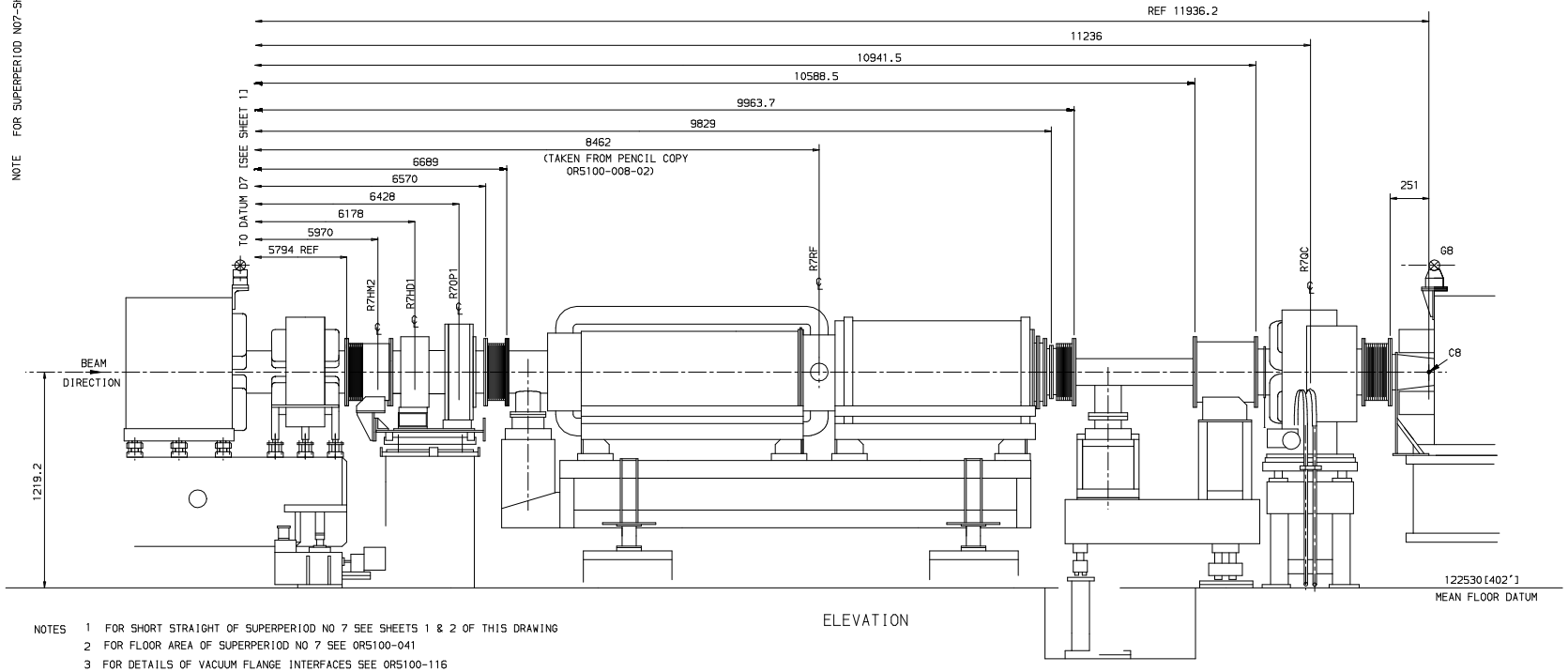

ELEVATION

NOTES
1 FOR SHORT STRAIGHT OF SUPERPERIOD NO 7 SEE SHEETS 1 & 2 OF THIS DRAWING
2 FOR FLOOR AREA OF SUPERPERIOD NO 7 SEE OR5100-041
3 FOR DETAILS OF VACUUM FLANGE INTERFACES SEE OR5100-116
4 FOR DETAILS OF POWER SUPPLIES SEE OR5105-924
5 FOR WATER COOLING DETAILS SEE OR5105-301
6 FOR DETAILS OF R.F.SCREEN SEE 0-SI-5100-162

ISSUE	DATE	MOD. NO.	DRN. BY	CHKD.	APPD.	STATUS
J	20-02-06	SI 01928	CA/FEL	EJM82	---	MANUF.

TOLERANCES UNLESS STATED – / –
FINISH – / REMOVE ALL BURRS
ORIGINAL SCALE 1:10 DO NOT SCALE
MATERIAL & SPEC. – / –
SURFACE TEXTURE µm – / ✓ UNLESS STATED
0 500mm
USED ON OR5100-001 – / –

© CCLRC 2006

THE CENTRAL LABORATORY OF THE RESEARCH COUNCILS RUTHERFORD APPLETON LABORATORY, CHILTON, OXON OX11 0QX.

TITLE SUPERPERIOD 7

LONG STRAIGHT ISIS

A0-SI-5100-009-03-J

SHEET 3 OF 3 SHEETS

A0-SI-5100-009-03-J

Printed by : ejm82 on 25-Sep-08