A0-SI-5100-009-01-M PROJECTION THIS DRAWING CONFORMS TO B.S.8888

NOTES
1 FOR LONG STRAIGHT OF SUPERPERIOD NO 7 SEE SHEET NO 3 OF THIS DRAWING
2 FOR FLOOR AREA OF SUPERPERIOD NO 7 SEE OR5100-041
3 FOR DETAILS OF VACUUM FLANGE INTERFACES SEE OR5100-116
4 FOR ITEM LIST SEE SHEET 3
5 FOR DETAILS OF H.E.P.TEST BEAM SEE OR5100-125
6 FOR POWER SUPPLIES DETAILS SEE OR5105-924
7 FOR WATER COOLING DETAILS SEE OR5105-301
8 FOR DETAILS OF R.F.SCREEN SEE 0-SI-5100-162

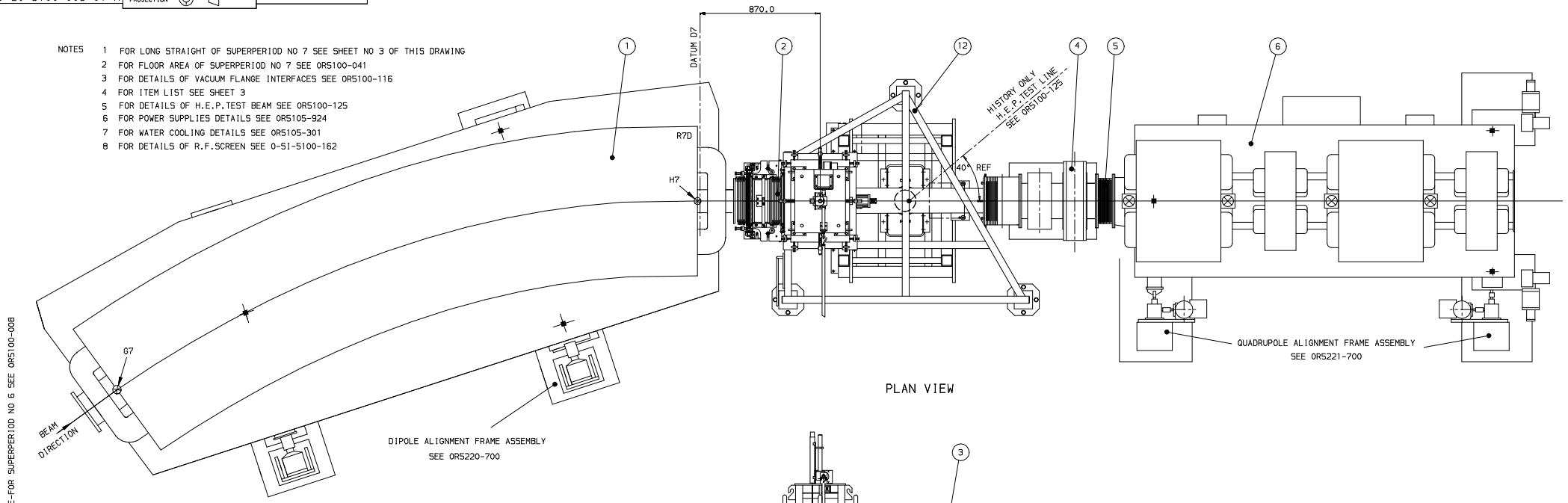


PLAN VIEW

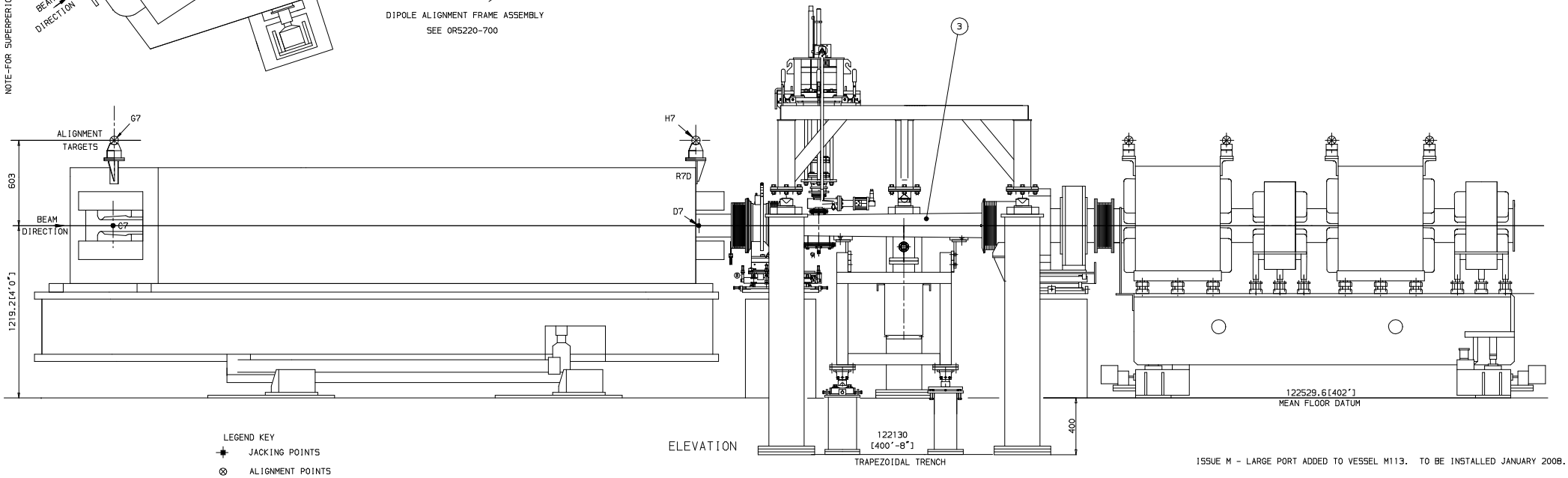


ELEVATION

NOTE - SUPERPERIOD NO 7 CONTINUED ON SHEET 2

LEGEND KEY
JACKING POINTS
ALIGNMENT POINTS

ISSUE M - LARGE PORT ADDED TO VESSEL M113. TO BE INSTALLED JANUARY 2008.

| ISSUE | DATE | MOD. NO. | DRN. BY | CHKD. | APPD. | STATUS |
|---|---|---|---|---|---|---|
| M | 24-10-07 | SI 20715 | CA/FEL | EJM | EJM | MANUF. |
| L | 20-06-06 | SI 02019 | CA/FEL | EJM82 | EJM | MANUF. |
| K | 20-02-06 | SI 01928 | CA/FEL | AF/FEL | EJM | ISSUE |
| J | X | X | SCL2318 | --- | --- | ISSUE |

TOLERANCES UNLESS STATED – – –
FINISH – – REMOVE ALL BURRS
ORIGINAL SCALE 1:10 DO NOT SCALE
MATERIAL & SPEC. – – –
SURFACE TEXTURE µm – ✓ UNLESS STATED
0 500mm
USED ON OR5100-001 – – –

© CCLRC 2007

THE CENTRAL LABORATORY OF THE RESEARCH COUNCILS RUTHERFORD APPLETON LABORATORY, CHILTON, OXON OX11 0QX.

TITLE SUPERPERIOD 7

SHORT STRAIGHT ISIS

A0-SI-5100-009-01-M

SHEET 1 OF 3 SHEETS

Check plot only!

A0-SI-5100-009-01-M

Printed by : ejm82 on 25-Sep-08