MEBT Simulation

M. Popovic

History & Credits

- Part of PET Project
- Del Larson's Design Modified
- Energy 1 MeV, 100 mA, H-Beam
- Matching to RFQ with 201.24 MHz

Trace3D & MEBT

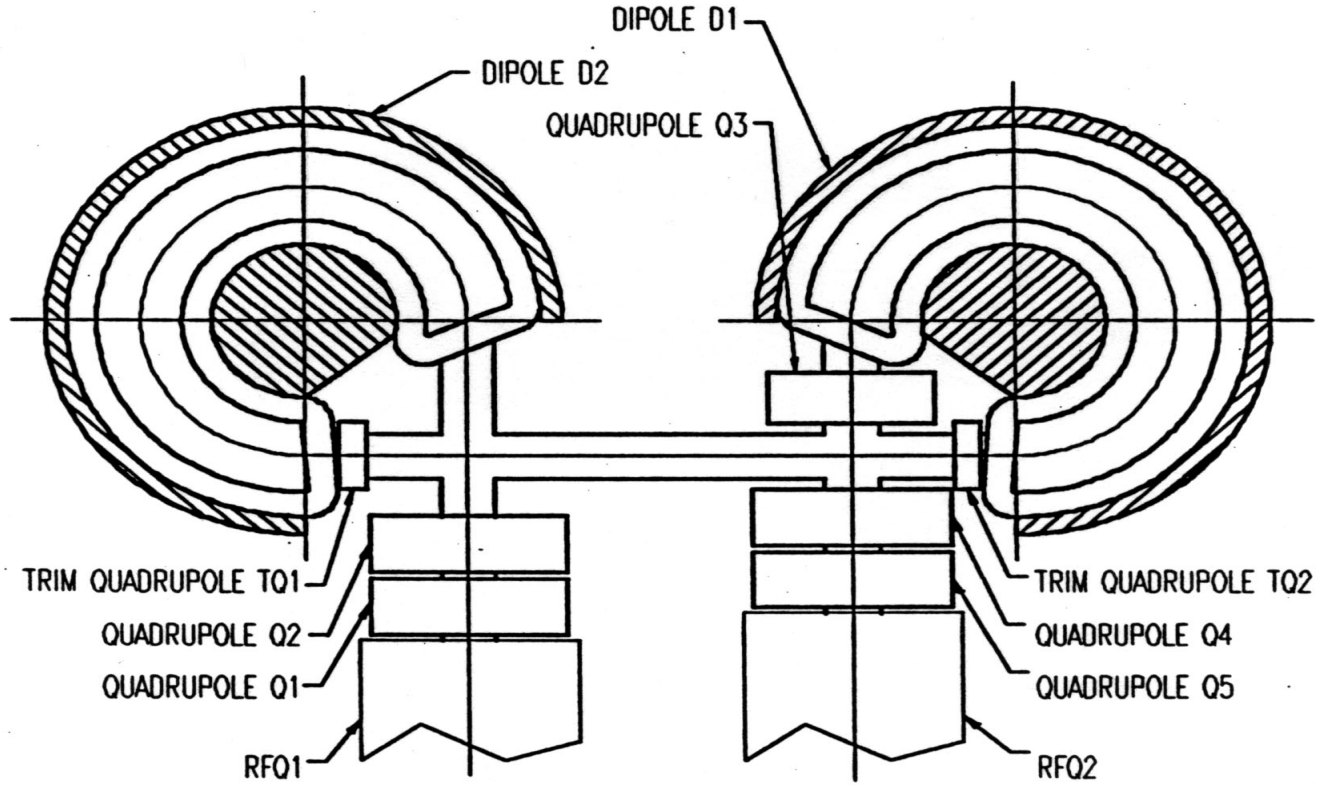

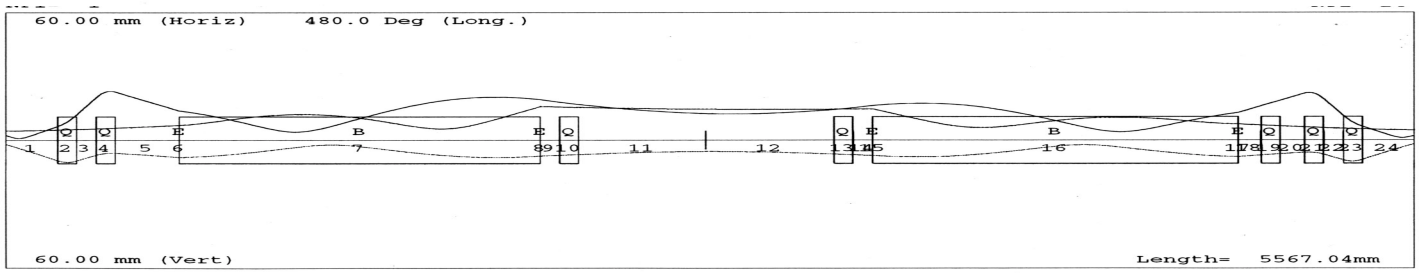

Zero Current Matched

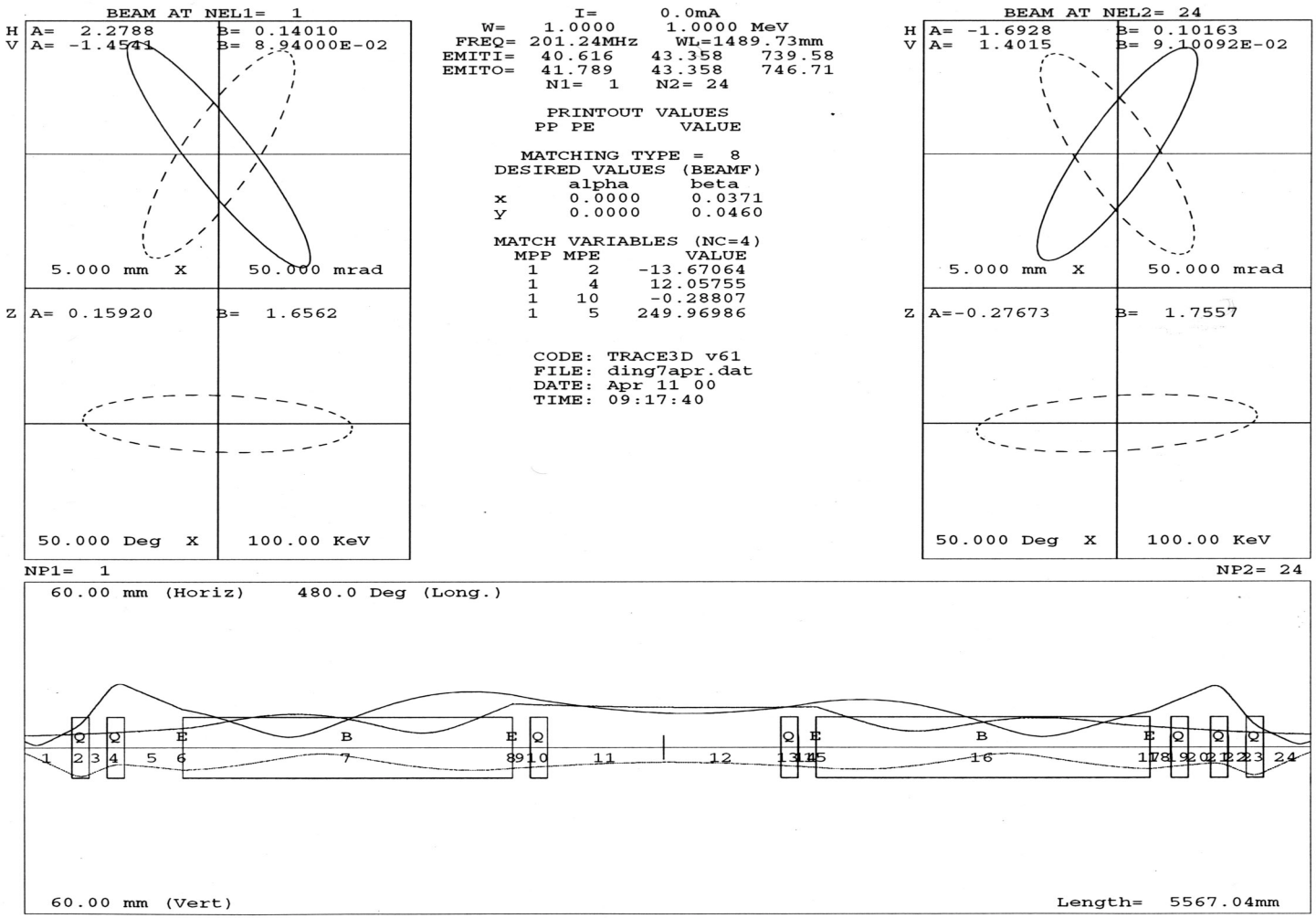

100mA Current

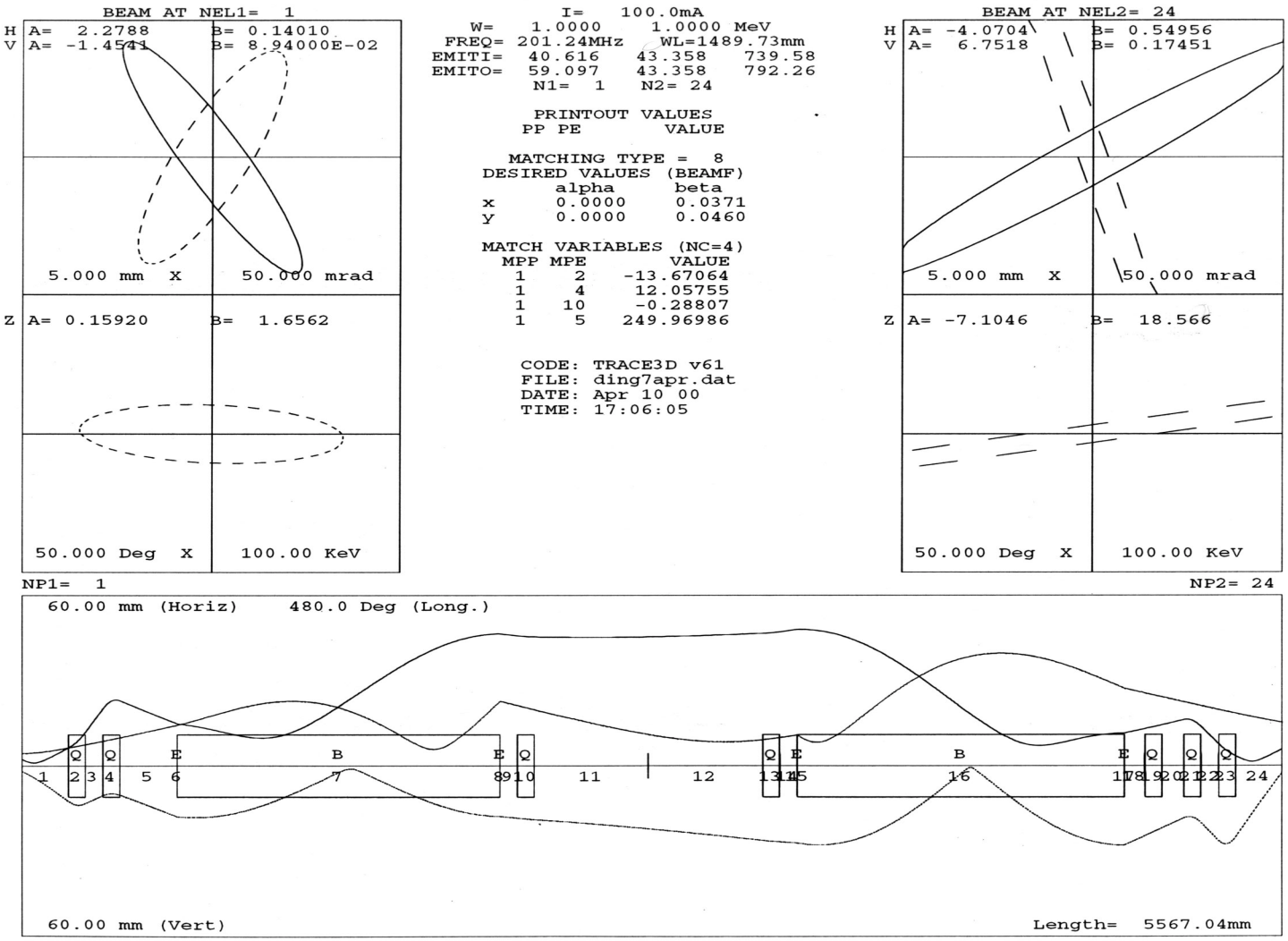
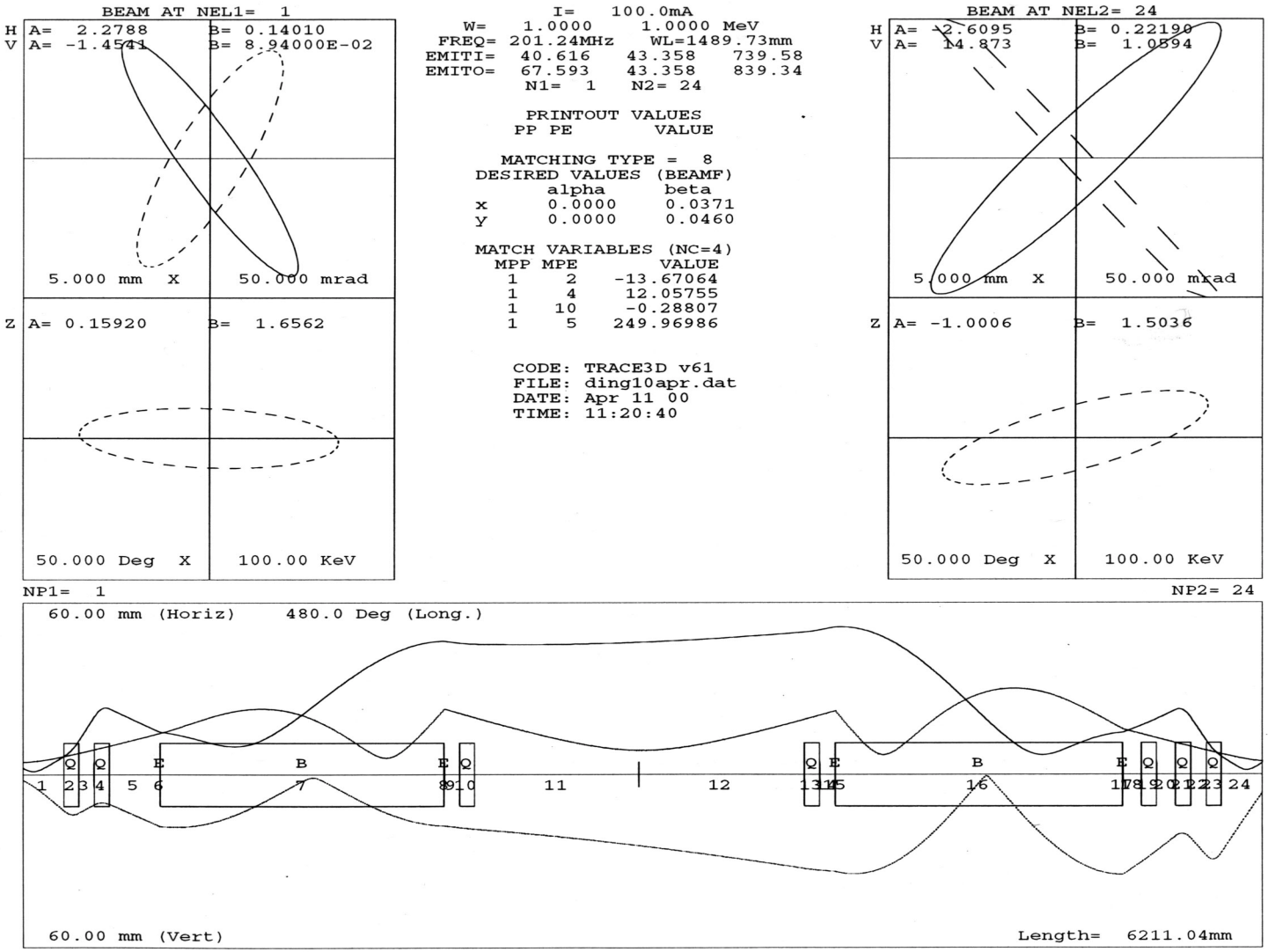
100mA Current, “Adjusted”